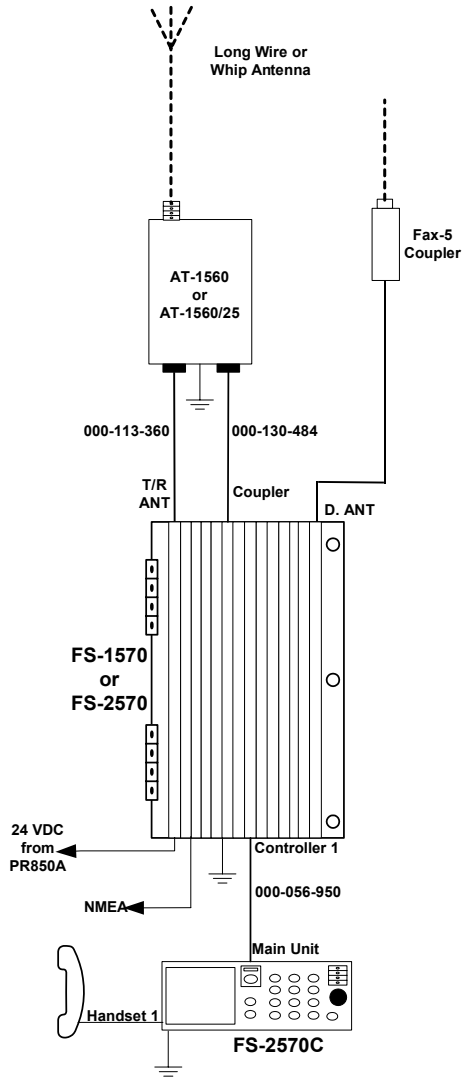

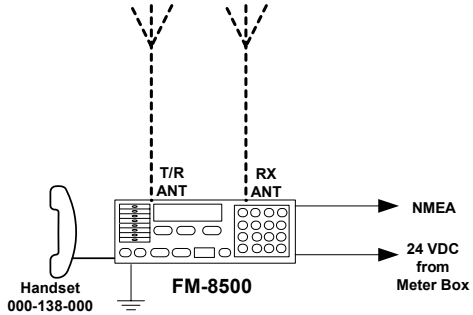

Notes:

1) Local Supplied ------
Factory Supplied ———
2) All External Connections Must be Fused.

FURUNO USA GMDSS

DESCRIPTION

A21815 / A21825
Interconnect Drawing