DS-80

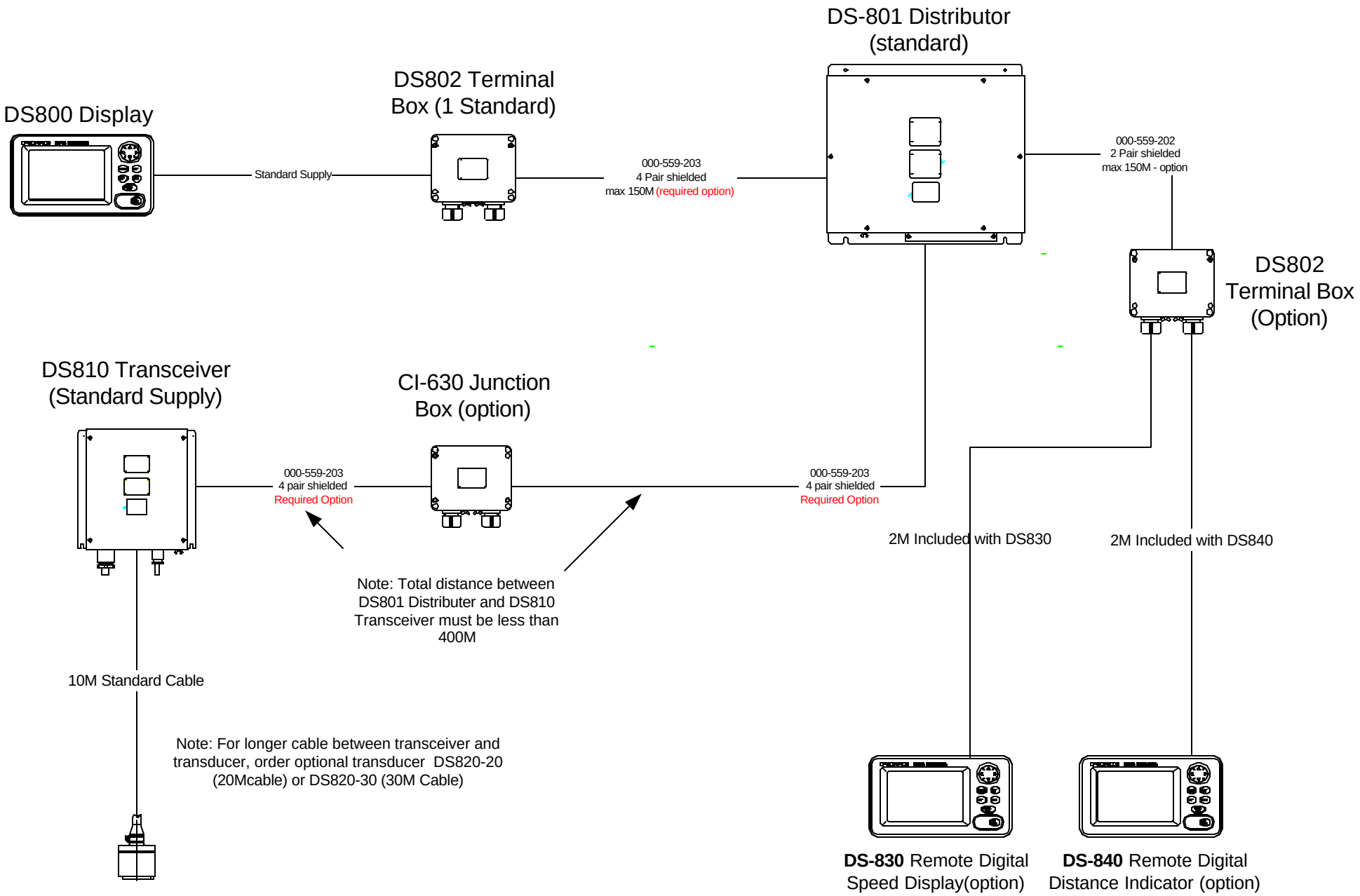
DS-801 Distributor
(standard)
DS800 Display
DS802 Terminal
Box (1 Standard)
Standard Supply
000-559-203
4 Pair shielded
max 150M (required option)
000-559-202
2 Pair shielded
max 150M - option
DS802
Terminal Box
(Option)
DS810 Transceiver
(Standard Supply)
CI-630 Junction
Box (option)
000-559-203
4 pair shielded
Required Option
000-559-203
4 pair shielded
Required Option
2M Included with DS830
2M Included with DS840
Note: Total distance between
DS801 Distributer and DS810
Transceiver must be less than
400M
10M Standard Cable
Note: For longer cable between transceiver and
transducer, order optional transducer DS820-20
(20Mcable) or DS820-30 (30M Cable)
DS-830 Remote Digital
Speed Display(option)
DS-840 Remote Digital
Distance Indicator (option)