FURUNO

INSTALLATION MANUAL

MARINE RADAR/ARPA

MODEL **FAR-2137S/2837S/2137S-BB**

FURUNO ELECTRIC CO., LTD.
NISHINOMIYA, JAPAN

PRINTED IN JAPAN

© FURUNO ELECTRIC CO., LTD.

9-52 Ashihara-cho,
Nishinomiya, Japan

Telephone : 0798-65-2111
fax : 0798-65-4200

Your Local Agent/Dealer

All rights reserved.

Printed in Japan

FIRST EDITION : APR . 2004
B : JUN . 14, 2004

PUB.No. IME-35210-B

(TATA) FAR-2137S/BB/2837S

00014868801

IME35210B00

⚠ SAFETY INSTRUCTIONS

⚠ WARNING

Radio Frequency Radiation Hazard

The radar antenna emits electromagnetic radio frequency (RF) energy which can be harmful, particularly to your eyes. Never look directly into the antenna aperture from a close distance while the radar is in operation or expose yourself to the transmitting antenna at a close distance.

Distances at which RF radiation levels of 100 and 10 W/m^2 exist are given in the table below.

Note: If the antenna unit is installed at a close distance in front of the wheel house, your administration may require halt of transmission within a certain sector of antenna revolution. This is possible–Ask your FURUNO representative or dealer to provide this feature.

Radiator type	Distance to 100 W/m^2 point	Distance to 10 W/m^2 point
SN30AF	1.2 m	9.5 m
SN36AF	0.7 m	8.3 m

⚠ WARNING

Do not open the equipment unless totally familiar with electrical circuits and service manual.

ELECTRICAL SHOCK HAZARD

Only qualified personnel should work inside the equipment.

Wear a safety belt and hard hat when working on the antenna unit.

Serious injury or death can result if someone falls from the radar antenna mast.

Construct a suitable service platform from which to install the antenna unit.

Serious injury or death can result if someone falls from the radar antenna mast.

Turn off the power at the mains switchboard before beginning the installation.

Fire, electrical shock or serious injury can result if the power is left on or is applied while the equipment is being installed.

Do not install the monitor unit, processor unit or control unit where they may get wet from rain or water splash.

Water in the units can result in fire, electrical shock, or damage the equipment.

⚠ WARNING

Be sure that the power supply is compatible with the voltage rating of the equipment.

Connection of an incorrect power supply can cause fire or damage the equipment .

Use only the specified power cable.

Fire or damage to the equipment can result if a different cable is used.

⚠ CAUTION

Attach securely protection earth to the ship's body.

The protection earth (grounding) is required to the AC power supply to prevent electrical shock.

Observe the following compass safe distances to prevent deviation of a magnetic compass:

	Standard compass	Steering compass
Antenna Unit (30 kw)	3.95 m	2.55 m
Monitor Unit (MU-201CR)	1.55 m	1.00 m
Monitor Unit (MU-231CR)	1.85 m	1.20 m
Processor Unit (RPU-013)	1.35 m	0.85 m
Control Unit (RCU-014)	0.30 m	0.30 m
Control Unit (RCU-015)	0.95 m	0.60 m
Control Unit (RCU-016)	0.65 m	0.45 m
Power Supply Unit (PSU-007)	0.85 m	0.55 m
Memory Card Interface Unit (CU-200)	0.90 m	0.60 m
RJB-001	1.10 m	0.70 m
Junction Box (RJB-001)	1.10 m	0.70 m
Switching Hub (HUB-100)	1.00 m	0.60 m

⚠ CAUTION

After fixing the antenna radiator, be sure to remove the guide pins.

Injury may result if the guide pins loosen and fall.

DO NOT lift the antenna unit by the radiator; lift it by the hoist rings. (Be sure to remove rings after hoisting the antenna unit.)

TABLE OF CONTENTS

EQUIPMENT LISTS iv

SYSTEM CONFIGURATION vi

1. MOUNTING 1-1
- 1.1 Antenna Unit 1-1
- 1.2 Monitor Unit 1-7
- 1.3 Power Supply Unit 1-11
- 1.4 Control Unit 1-12
- 1.5 Processor Unit 1-15

2. WIRING 2-1
- 2.1 Interconnection 2-1
- 2.2 Antenna Unit 2-2
- 2.3 Monitor Unit 2-7
- 2.4 Processor Unit 2-8
- 2.5 Power Supply Unit 2-12
- 2.6 Changing AC Power Specifications of Processor Unit 2-12

3. SETTING AND ADJUSTMENT 3-1
- 3.1 DIP Switch Setting 3-1
- 3.2 Initializing tuning 3-2
- 3.3 Heading Alignment 3-3
- 3.4 Adjustment Sweep Timing 3-5
- 3.5 Suppressing Main Bang 3-6
- 3.6 Other Settings 3-7

4. INSTALLING OPTIONAL EQUIPMENT 4-1
- 4.1 Gyro Converter GC-10 4-1
- 4.2 Memory Card Interface Unit 4-9
- 4.3 DVI-RGB Conversion Kit 4-13
- 4.4 BNC Converter Converter 4-15
- 4.5 Switching Hub 4-16

5. INPUT/OUTPUT DATA 5-1

INSTALLATION MATERIALS, ACCESSORIES, SPARE PARTS A-1

OUTLINE DRAWINGS D-1

INTERCONNECTION DIAGRAM S-1

EQUIPMENT LISTS

Standard Supply

Name	Type	Code No.	Qty	Remarks	
Antenna Unit	SN30AF	-	1	Radiator	
	SN36AF	-			
	RSB-098	-	1	200 VAC 3ϕ 50 Hz, 220 VAC 3ϕ 60 Hz	Antenna Chassis
	RSB-099	-		380 VAC 3ϕ 50 Hz, 440 VAC 3ϕ 60 Hz	
	RSB-100	-		220 VAC, 3ϕ, 50 Hz	Antenna Chassis for HSC
	RSB-101	-		220 VAC, 3ϕ, 60 Hz	
	RSB-102	-		440 VAC, 3ϕ, 60 Hz	
Power Supply Unit	PSU-007	-	1		
Monitor Unit	MU-201CR	-	1	For FAR-2137S	
	MU-231CR			For FAR-2837S	
Processor Unit	RPU-013	-	1	AC type	
Control Unit	RCU-014	-	1	Standard type	
	RCU-015			Trackball type	
Installation Materials*	CP03-27201	008-538-720	1	For antenna unit	
	CP03-25700	000-080-435	1	15 m signal cable RW-9600	
	CP03-25710	000-080-436		30 m signal cable RW-9600	
	CP03-25720	000-080-437		50 m signal cable RW-9600	
	CP03-25730	000-082-191		40m signal cable RW-9600	
	CP03-25800	000-080-434	1	Cable assy. for monitor unit	
	CP03-25602	008-535-940	1	For RPU-013, AC set	
	CP03-27301	008-538-740	1	For PSU-007	
Accessories*	FP03-09810	008-536-010	1	For monitor unit	
	FP03-09850	008-535-610	1	For RCU-014	
	FP03-09860	008-535-690		For RCU-015/016	
	FP03-10101	008-538-730	1	For antenna unit	
Spare Parts*	SP03-14404	008-535-910	1	For processor unit 100 VAC set	
	SP03-14405	008-535-920	1	For processor unit 220 VAC set	
	SP03-14401	008-535-990		For monitor unit, AC set	

*: See lists at the end of this manual.

Optional Equipment

Name	Type	Code No.	Remarks	
Gyro Converter	GC-10-2	000-080-440	See chapter 4.	
Performance Monitor	PM-51	000-081-261	Mandatory for IMO radar	
Transformer Unit	RU-1803	-	For processor unit, 440 VAC → 100 VAC	
	RU-3305	-	For de-icer , 110/115/220/230 VAC → 100 VAC	
	RU-5693	-	For RSB-098/099, 110 V →220 VAC	Not available for HSC
	RU-6522	-	For RSB-098/099, 220 V →200 VAC	
	RU-5466-1	-	For RSB-098/099, 440 V →220 VAC	
Sub Display	FMD-8010	-		
Memory Card Interface Unit	CU-200-FAR	000-081-568	W/CP03-27430, See chapter 4.	
External Buzzer	OP03-21	000-030-097		
Control Unit	RCU-016	000-080-299	Remote type, W/FP03-09860	
RAM Card	00RAM08MC-005	004-376-740	8 MB	
DVI-RGB Conversion Kit	OP03-180	008-536-070	See chapter 4.	
Cable Assy.	XH10P-W-5P L=20M	000-149-057	Between processor and control unit	20 m
	XH10P-W-5P L=30M	000-149-058		30 m
	XH10P-W-5P-A L=10M	000-149-050	Between control units, 10 m	
	XH10P-W-5P-A L=20M	000-149-051	Between control units, 20 m	
	XH10P-W-5P-A L=30M	000-149-052	Between control units, 30 m	
	DVI-D/D S-LINK 10M	000-150-200	Monitor-Processor, 10m	
	S03-9-5	008-206-640	For external radar, 5 m, 8-8P	
	S03-9-10	008-206-650	For external radar, 10 m, 8-8P	
	S03-9-15	008-209-160	For external radar, 15 m, 8-8P	
LAN Cable Kit (with armor)	CP03-28900	000-082-658	FR-FTPC-CY 10 m	Modular connector MPS588-C, 2pcs
	CP03-28910	000-082-659	FR-FTPC-CY 20 m	
	CP03-28920	000-082-660	FR-FTPC-CY 30 m	
Accessories	FP03-09820	008-535-560	Hanger assy. for MU-201CR	
	FP03-09830	008-536-020	Hanger assy. for MU-231CR	
Hand Grip	FP03-09840	008-535-570	For monitor unit	
Dust Cover	03-163-1201	100-307-260	For MU-201CR	
	03-163-2101	100-307-270	For MU-231CR	
Clamp Plate	OP03-182	008-535-620	For RCU-014	
Flush Mount Kit	FP03-09870	008-535-630	For control unit RCU-014/015/016	
Coupling Pedestal	OP03-183	008-535-640	For RCU-014&MU-201CR	
	OP03-184	008-535-650	For RCU-014& MU-231CR	
	OP03-185	008-535-660	For RCU-014	
Desktop Mount Kit	FP03-10201	008-539-530	For CU-200	
Console Mount Kit	FP03-10202	008-539-540	For CU-200	
BNC connector converter	DSUB-BNC-1	000-148-528	For VDR	
Junction Box	RJB-001	-	For more than 100m antenna cable	
Switching Hub	HUB-100	-		

SYSTEM CONFIGURATION

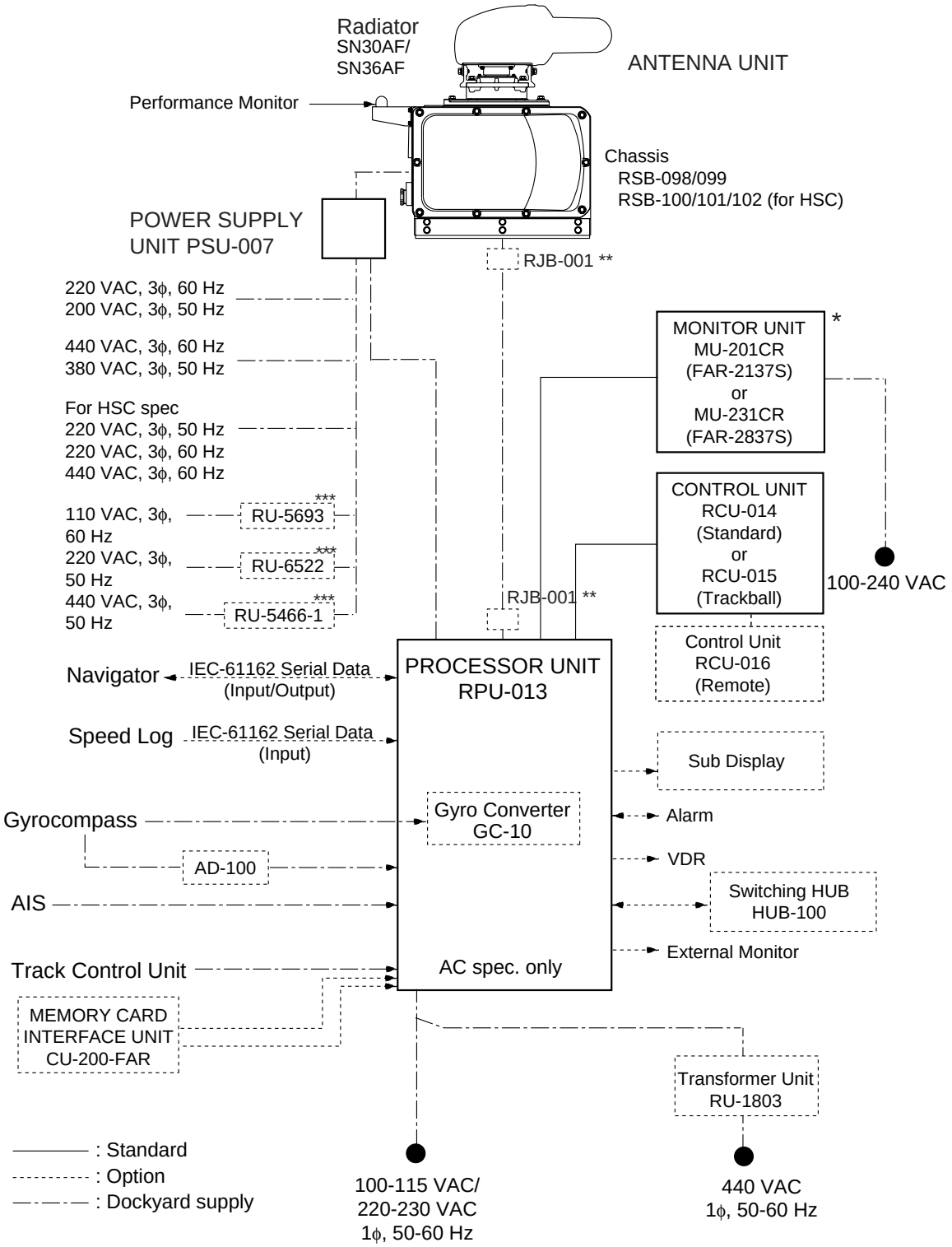

*: For FAR-2137S-BB, a monitor unit is prepared by user. See page 1-7.
**: Used for antenna cable more than 100 m.
***: Not available for HSC spec.

Category of Units
Antenna Unit: Exposed to weather
All other units: Protected from weather

1. MOUNTING

1.1 Antenna Unit

Mounting considerations

- The antenna unit is generally installed either on top of the wheelhouse, on the radar mast, or on a suitable platform. Locate the antenna unit where there is a good all-round view.
- No funnel, mast or derrick should be within the vertical beamwidth of the antenna unit in the bow direction, especially zero degrees ±5°, to prevent blind sectors and false echoes on the radar picture.
- It is rarely possible to place the antenna unit where a completely clear view in all directions is available. Thus, you should determine the angular width and relative bearing of any shadow sectors for their influence on the radar at the first opportunity after fitting.
- Locate a direction finder antenna clear of the antenna unit to prevent interference to the direction finder. A separation of more than two meters is recommended.
- To lessen the chance of picking up electrical interference, avoid where possible routing the signal cable near other onboard electrical equipment. Also avoid running the cable in parallel with power cables.
- A magnetic compass will be affected if the antenna unit is placed too close to the magnetic compass. Observe the compass safe distances on page ii to prevent deviation of the magnetic compass.
- Do not paint the radiator aperture, to ensure proper emission of the radar waves.
- The signal cable run between the antenna and processor units is available in lengths of 15 m (standard), 30 m and 50 m. Whatever length is used it must be unbroken; namely, no splicing allowed.
- The antenna base is made of cast aluminum. To prevent electrolytic corrosion of the antenna base, use the seal washers and corrosion-proof rubber mat and ground the unit with the ground wire (supplied).
- Deposits and fumes from a funnel or other exhaust vent can adversely affect the aerial performance and hot gases may distort the radiator portion. The antenna unit must not be mounted where the temperature is more than 70°C.
- Leave sufficient space around the unit for maintenance and servicing. See the antenna unit outline drawing for recommended maintenance space.

Installation precaution for S-band antenna unit

If an S-band antenna unit is mounted near the end of a platform to provide sufficient rotation clearance for the radiator, the antenna unit, because of its weight, swings up and down by ship's vibration and rolling. This exerts excessive levels of stress at the base of the radiator, which can damage the radiator. To prevent this, relocate the antenna unit, or if relocation is not possible, reinforce the platform.

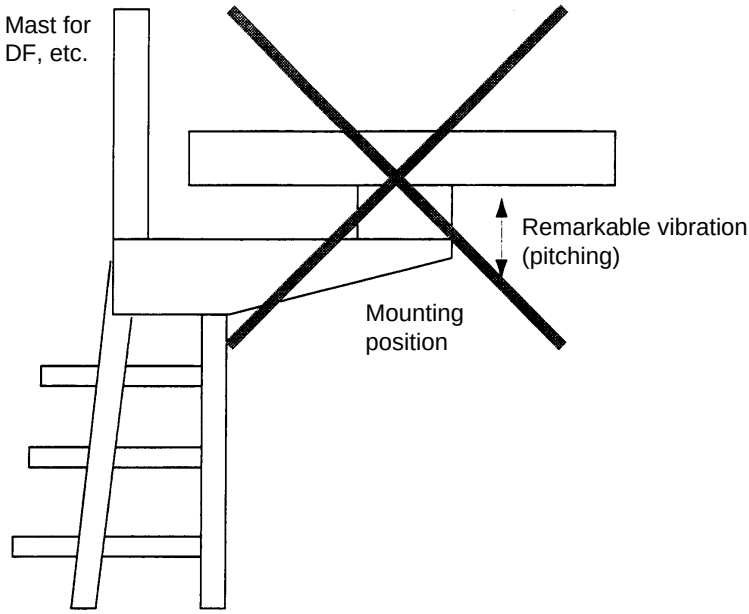

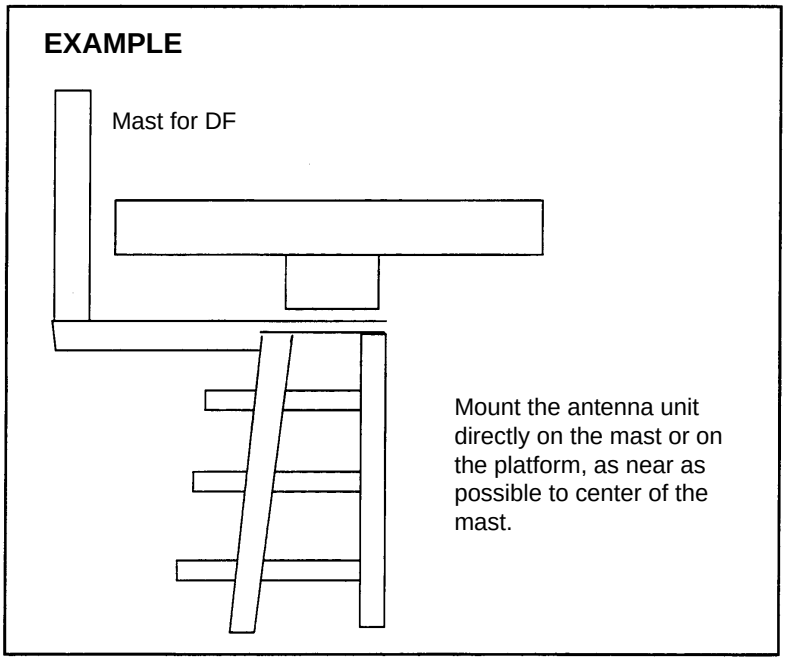

Mounting precaution for S-band antenna unit

Antenna unit assembling

The antenna radiator and the antenna housing are shipped in separate packages. Assemble them as below. The antenna unit may be assembled before hosting it to the mounting platform. However, do not lift the antenna unit by the radiator.

Antenna unit assembling procedure

1. Screw the guide pins (2 pcs.) in the radiator.
2. Remove the protective cap from the choke guide and radiator.
3. Grease O-ring and set it to the groove of the choke guide.
4. Place the radiator on the radiator bracket. (Radiator direction is shown by the logo on the bracket. If reversely oriented the radiator cannot be set to the bracket.)
5. Loosely fix the radiator to the radiator bracket with hex bolts (M10X25), spring washers and flat washers.
6. Remove the guides pins and tighten hex bolts.

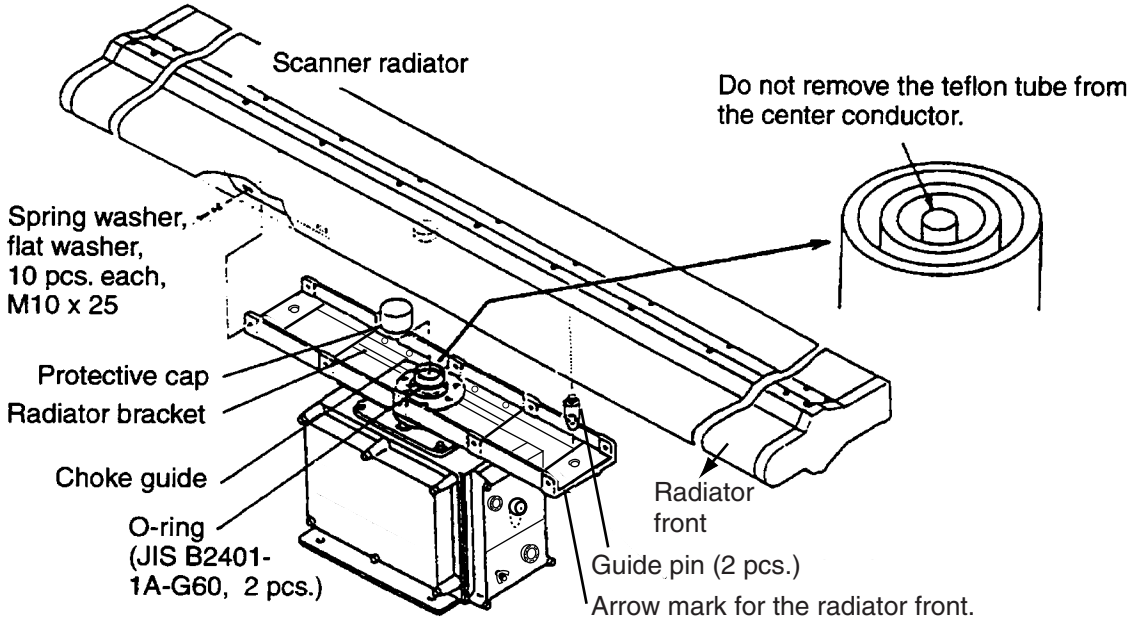

Assembling the radiator bracket

⚠ CAUTION

Be sure to remove the guide pins after fixing the radiator.

Injury may result if the guide pins loosen and fall.

How to lift the antenna unit

1. Fix the antenna radiator to the antenna unit chassis as shown on page 1-4.
2. Attach the lifting fixtures and collars as shown below.
3. Position the radiator as shown below and arrange the ropes A and B.

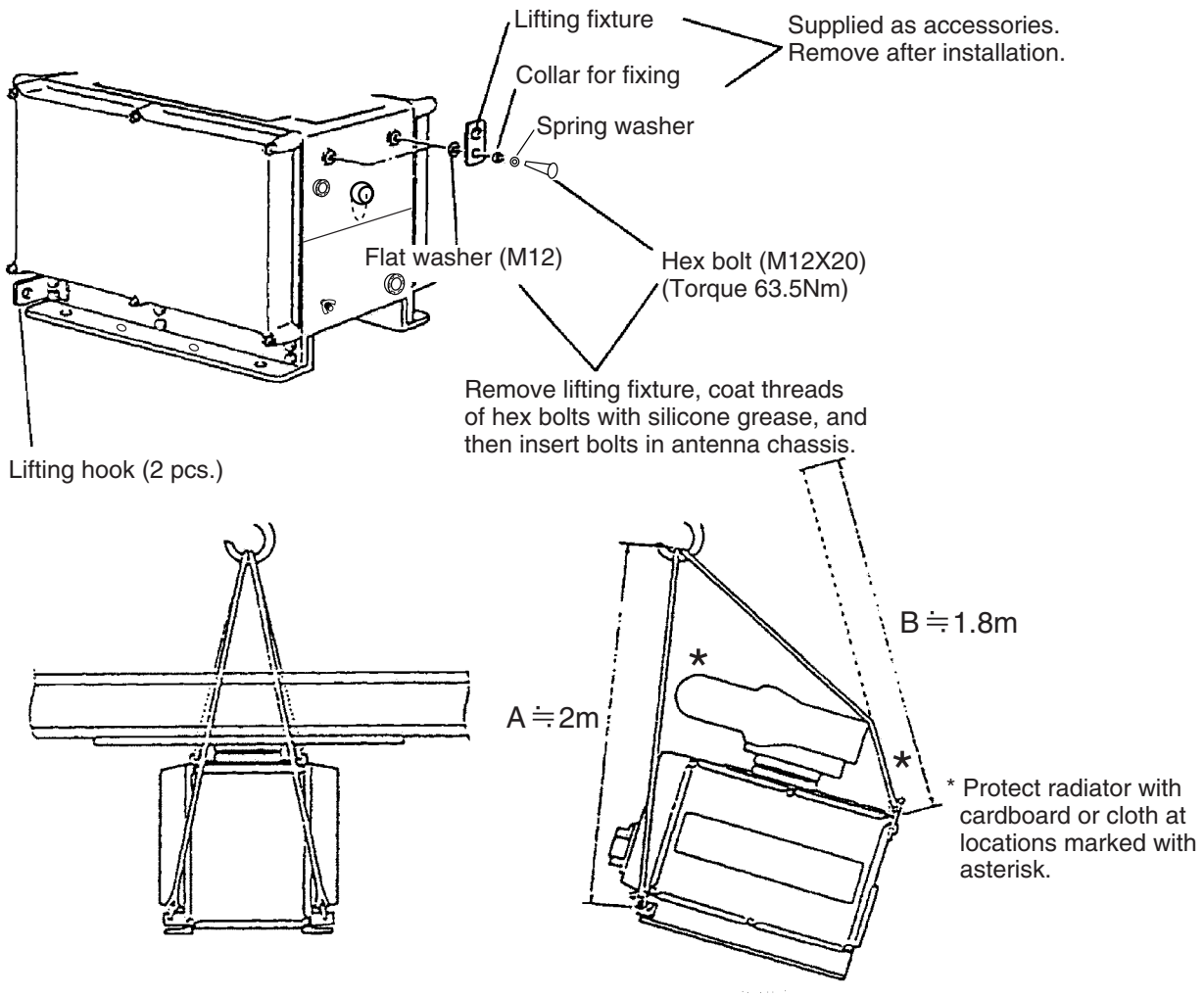

Attachment of lifting fixtures, collar and ropes

Fastening the antenna unit to the mounting platform

See the figure on the next page for antenna unit mounting.

1. Referring to the antenna outline drawing, drill eight fixing holes of 15 mm in diameter in the radar mast platform or the deck.
   - The diameter of the mast for fixing the antenna unit platform must be over 250 mm.
   - The thickness of the antenna unit platform must be over 15 mm.
   - The reinforcement rib must be installed diagonally as shown below.

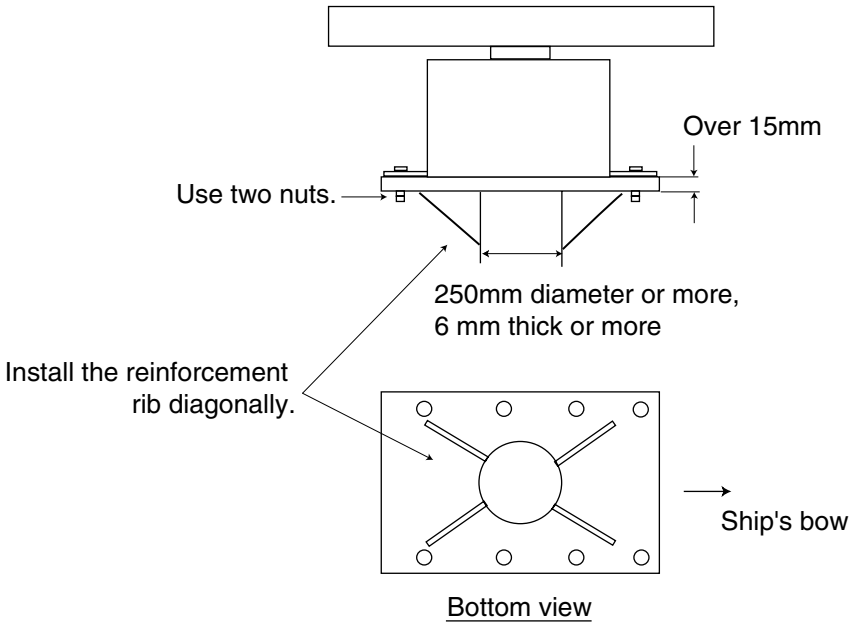

Installation of reinforcement ribs

2. Place the corrosion-proof rubber mat (supplied) on the mounting platform.
3. Hoist the antenna unit as shown on page 1-3 and place it on the rubber mat. Orient the cable gland toward the ship's stern (or port, starboard). Remove the lifting fixtures and collars.
4. Fix the antenna base to the mounting platform with four M12X70 hex bolts, nuts, washers and seal washers (supplied). For the unit with the performance monitor (PM), orient the PM toward the ship's stern.
5. Arrange the grounding terminal at the nearest grounding spot with the M6X25 hex bolt, nut and washers. Then, fix a ground wire (RW-4747, 340 mm) to the terminal.
6. Connect the other end of the ground wire to the ground terminal of the antenna unit.
7. Coast grounding terminal and fixing bolts on the antenna unit with silicone sealant (supplied).

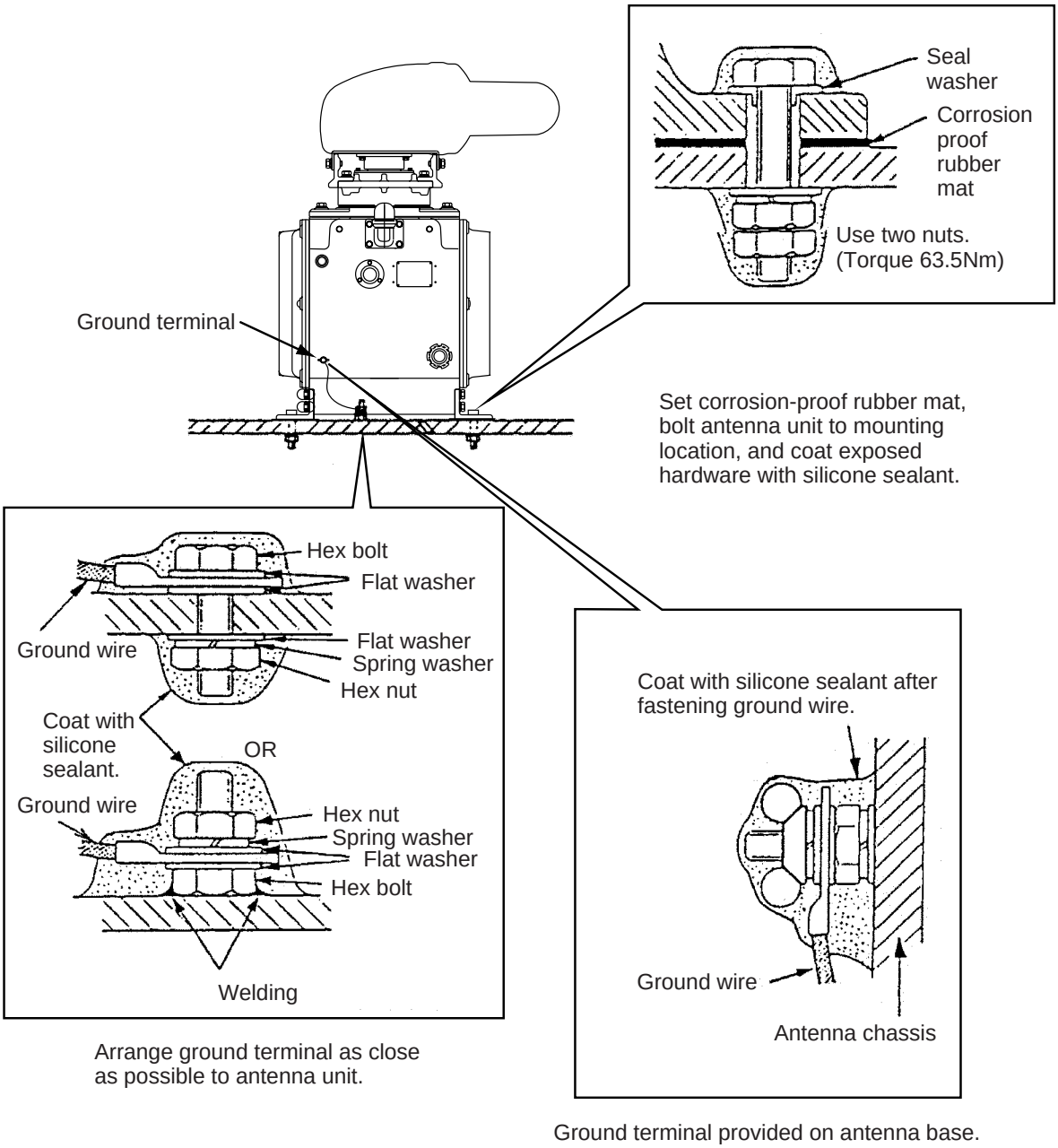

Mounting of antenna unit

1.2 Monitor Unit

The monitor unit can be flush mounted in a console panel, or mounted on a desktop using the optional accessories.

Note: FAR-2137S-BB has no monitor unit. Prepare a suitable one locally.
Recommended monitor: SXGA (1280x1024), aspect ratio 5:4

Mounting considerations

When selecting a mounting location, keep in mind the following points:

- Select a location where the display unit can be viewed conveniently and where the screen can be viewed while facing towards the bow.
- Locate the unit out of direct sunlight and away from heat sources because of heat that can build up inside the cabinet.
- Locate the equipment away from places subject to water splash and rain.
- Leave sufficient space on the sides and rear of the unit to facilitate maintenance.
- A magnetic compass will be affected if the monitor unit is placed too close to the magnetic compass. Observe the compass safe distances on page ii to prevent deviation of a magnetic compass.

Mounting procedure

Flush mounting

Follow the procedure below to mount the monitor unit in a console panel.

1. Make cutout in mounting location referring to the outline drawing shown below.
2. Insert the monitor unit to the hole and fix it by four tapping screws (6x30).
3. Attach panel hooks near the fixing holes (upper two locations). These are used to pull out the monitor unit from a console panel for servicing.
4. Attach four panel covers to the fixing holes.

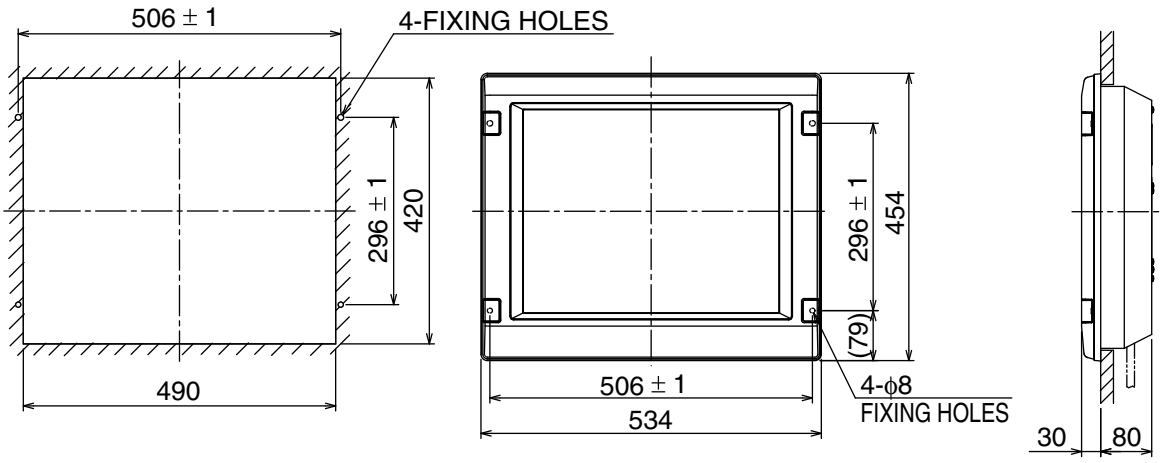

Monitor unit MU-201CR
(For FAR-2137S)

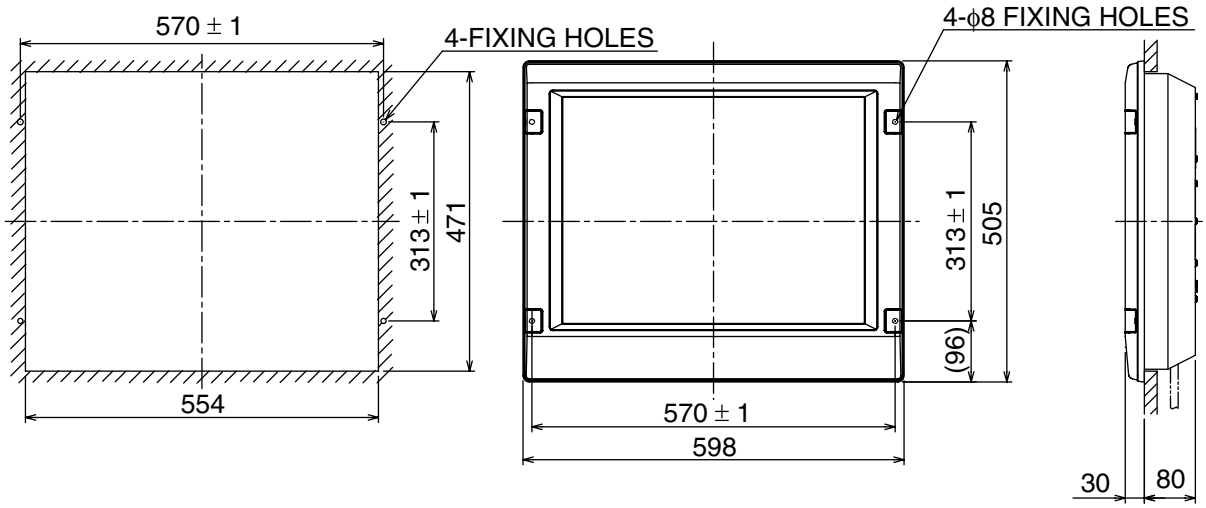

Monitor unit MU-231CR
(For FAR-2837S)

Flush mounting of monitor unit

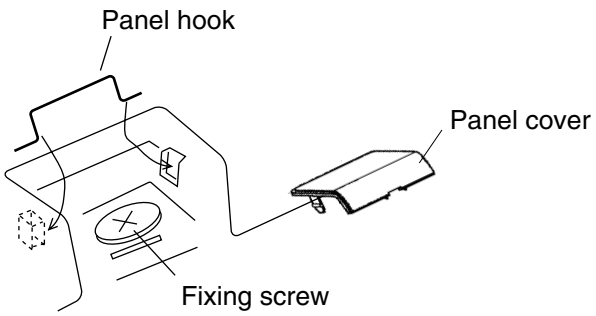

Attaching panel hook and panel cover

Note: If you need to remove the monitor unit from the mounting panel, remove the four panel covers with your fingernail and use two panel hooks supplied as accessories to lift the monitor unit.

Desktop mounting

Use the optional accessories to mount the monitor unit on a desktop.

- For FAR-2137S: FP03-09820 (Code No.: 008-535-560)
- For FAR-2837S: FP03-09830 (Code No.: 008-536-020)

Contents of FP03-09820/09830

Name	Type	Code No.	Qty	Remarks
Hanger L	03-163-1111	100-305-140	1	
Hanger R	03-163-1112	100-305-180	1	
Hanger stay	03-163-1113	100-305-190	1	For FAR-2137S
	03-163-2071	100-305-370		For FAR-2837S
Hole plug	CP-30-HP-13	000-147-143	2	
Plastic rivet	KB-13 Rivet Black	000-570-276	4	
Hex. bolt	M6x25	000-802-771	4	
Hex. bolt	M10x30	000-802-182	2	
Spring washer	M10	000-864-261	2	
Flat washer	M10	000-864-131	2	

1. Assemble two hangers and hanger stay with two hex bolts (M10x30), flat washers and spring washers and cover each hex bolt with hole plug.
2. Fix the above assembly to the mounting location with four hex bolts (M12, dockyard supply).
3. Fasten the monitor unit to the mounting hanger assembly with four hex bolt (M6x25, supplied).
4. Cover each hex bolts with panel cover.
5. Cover each holes for hand grip on the hangers with plastic rivet (4 pcs).

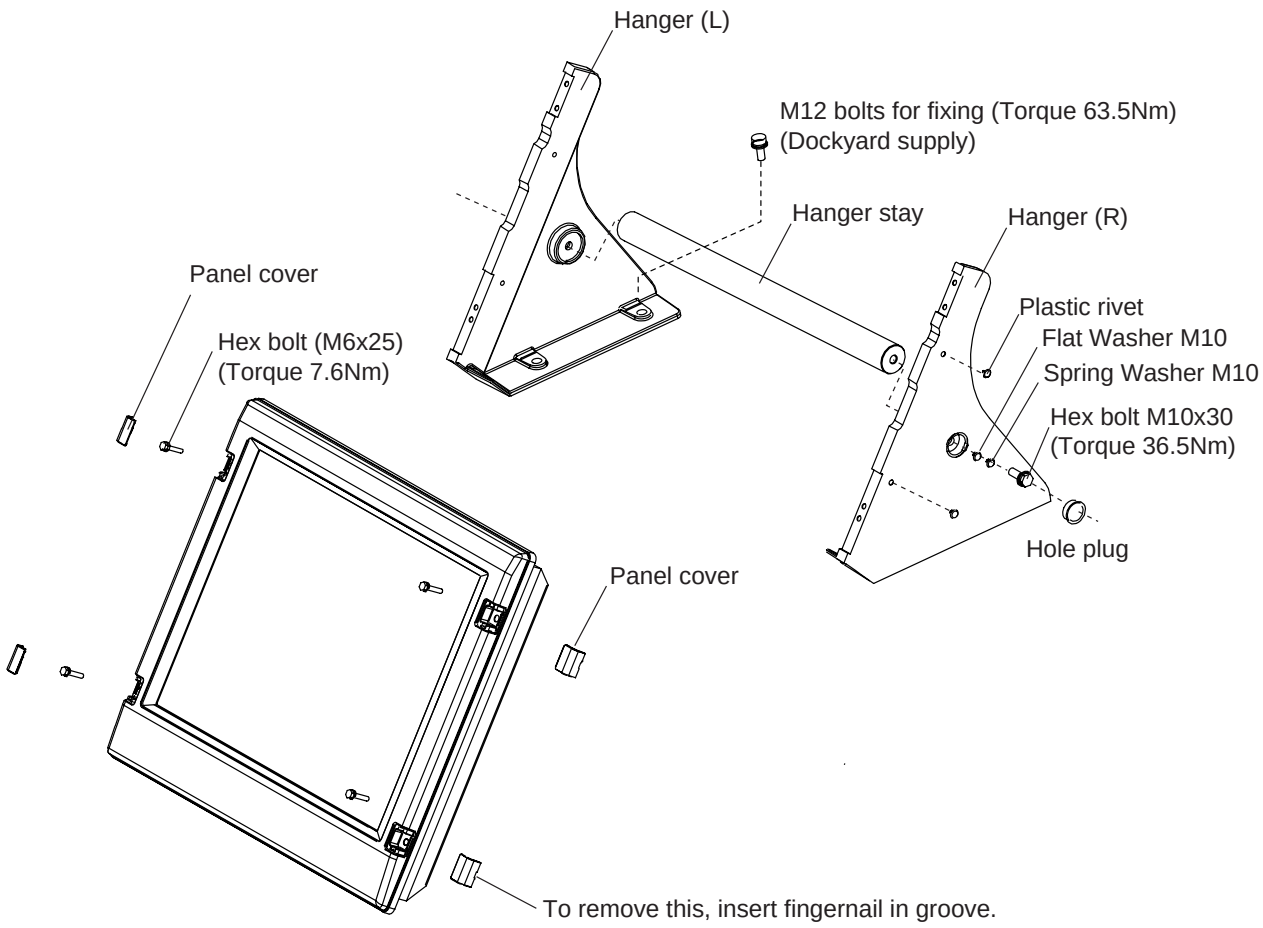

Monitor Unit

The hand grip is optionally available for the desktop mounting monitor unit.

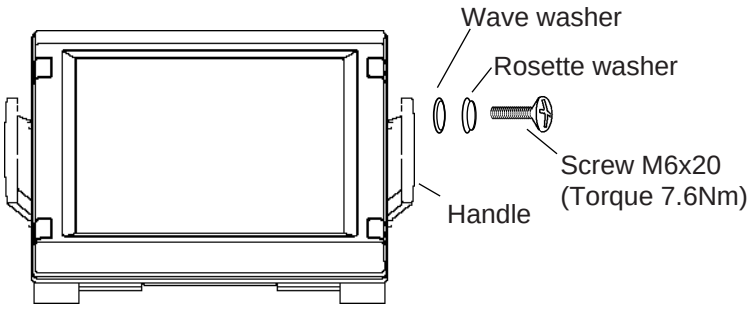

1.3 Power Supply Unit

The Power Supply Unit PSU-007 does not contain usual operating controls. Therefore, it can be installed in any recessed place either in vertical or horizontal position. (For the console mount display unit, the PSU-007 can be installed inside the console.) However, select a dry and well-ventilated location and observe the compass safe distance to prevent deviation of a magnetic compass. See page ii.

1. Open the cover of the power supply unit.
2. Fasten the unit to chosen location with four self-tapping screws 5x20.
3. After connecting cables, attach the cover.

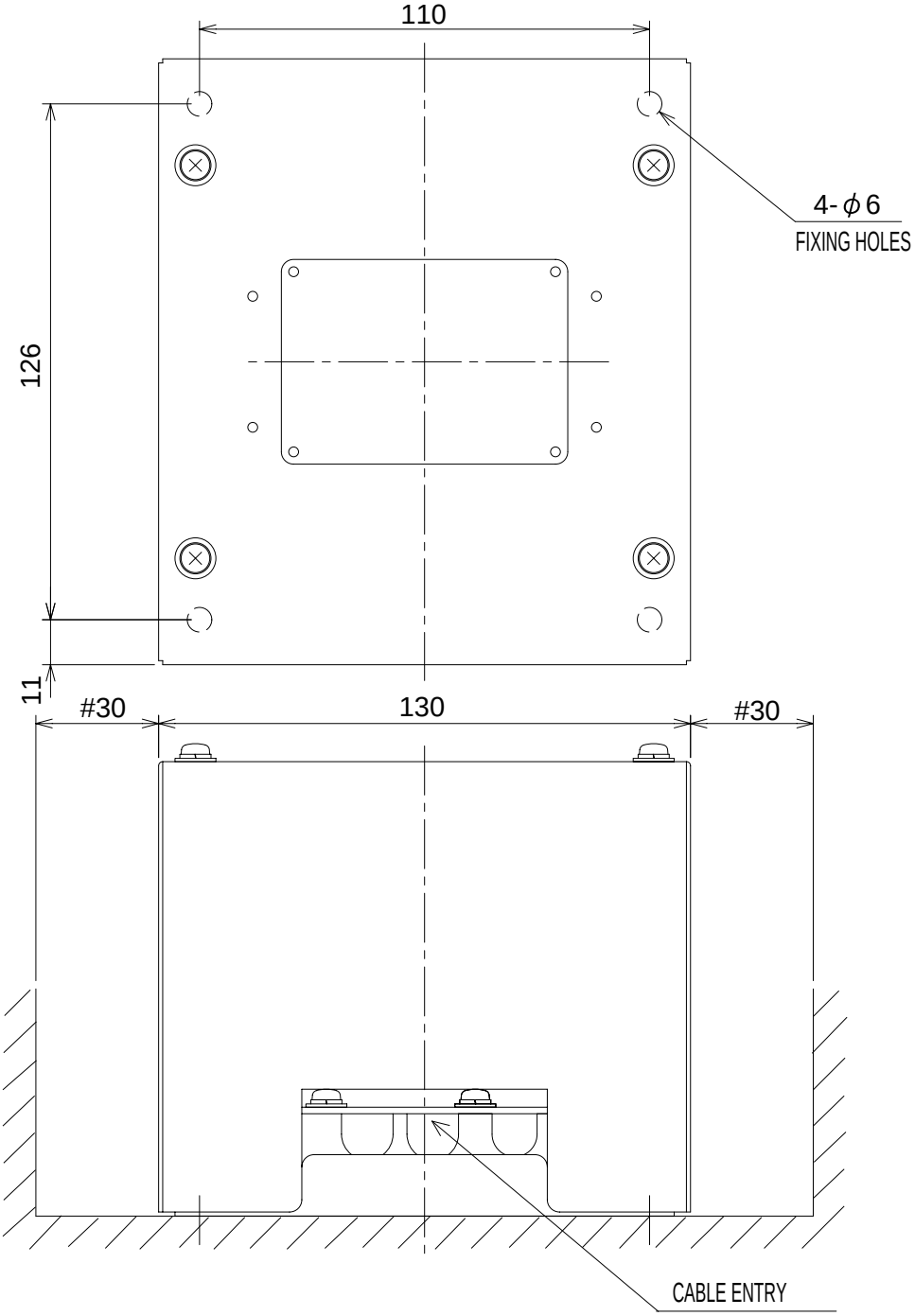

1.4 Control Unit

The control unit may be mounted on a tabletop, with or without the KB fixing metal (supplied), which mounts the control unit at an angle.

Mounting considerations

When selecting a mounting location, keep in mind the following points:

- Select a location where the control unit can be operated conveniently.
- Locate the unit away from heat sources because of heat that can build up inside the cabinet.
- Locate the equipment away from places subject to water splash and rain.
- Determine the mounting location considering the length of the signal cable between the control unit and the processor unit. (The signal cable comes in lengths of 10 m).
- A magnetic compass will be affected if the control unit is placed too close to the magnetic compass. Observe the compass safe distances on page ii to prevent deviation of a magnetic compass.

Fixing with KB fixing plate

1. Fix the KB fixing plate to the bottom of the control unit.
2. Attach cushions (three for RCU-014, two for RCU-015/016) to the bottom of the control unit as shown below.
3. Fix it to a desired location with self-tapping screws (local supply).

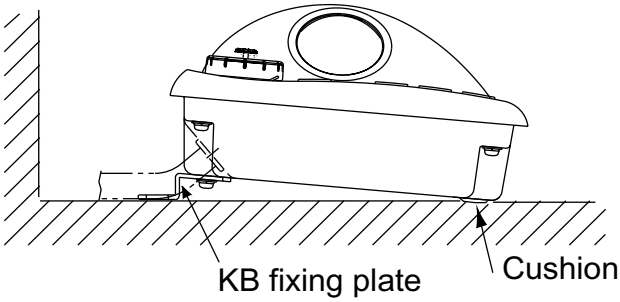

Side view for RCU-014/015/016

Fixing without KB fixing metal

1. Drill four mounting holes of 5 mm diameter referring to the outline drawing at the back of this manual.
2. Fix the control unit with four screws (M4) from under side of the tabletop. (The M4 screws with a sufficient length for the thickness of the tabletop should be provided locally.)

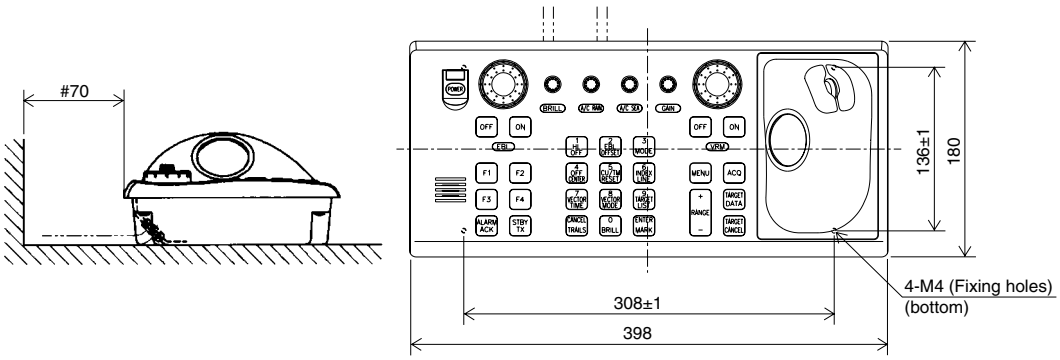

Control Unit RCU-014

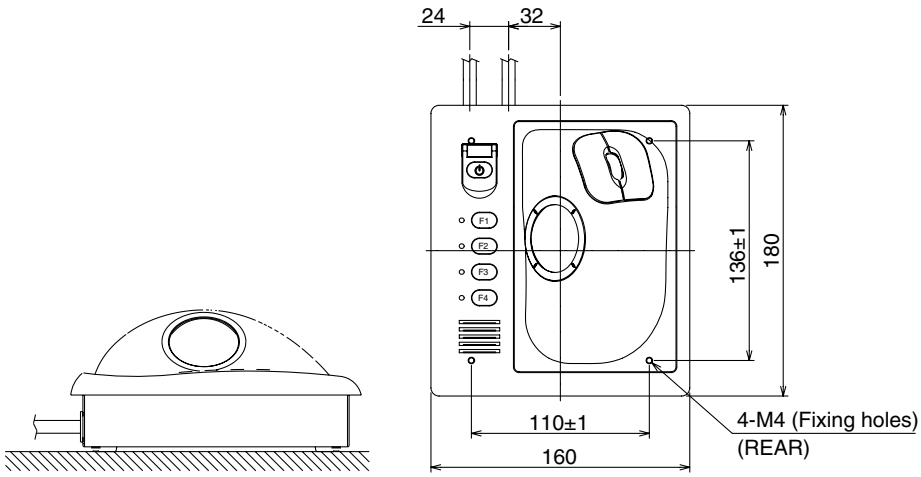

RCU-015/016

Flush mounting

Use the optional flush mount kit FP03-09870 to mount the control unit RCU-014, RCU-015 and/or RCU016 to a console panel.

Name: Flush mount kit
Type: FP03-09870
Code No.: 008-535-630

No.	Name	Type	Qty
1	Mount plate	03-163-7531	4
2	Hex bolt	M4	4
3	Wing screw	M4X30	4

1. Prepare a cutout in the mounting location as shown in the figure below.

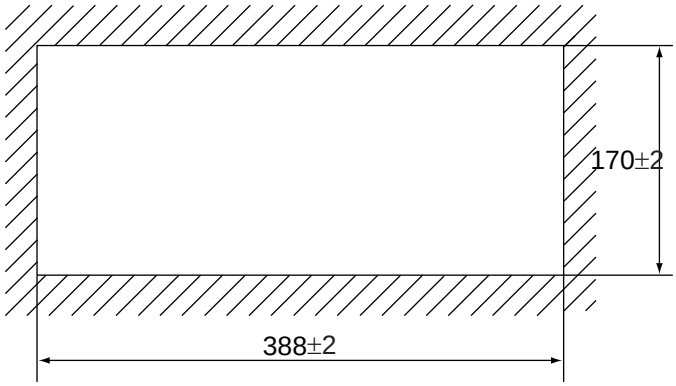

For RCU-014

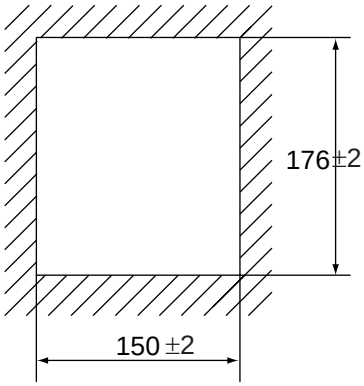

For RCU-015 and RCU-016

2. Set the control unit to the cutout.
3. Attach the mounting plate to the control unit with four screws from the rear side.
4. Screw the wing screw to each mounting plate and then insert hex bolt to each wing screw.
5. Fasten each wing screws and then fasten the hex nuts as shown in the figure below.

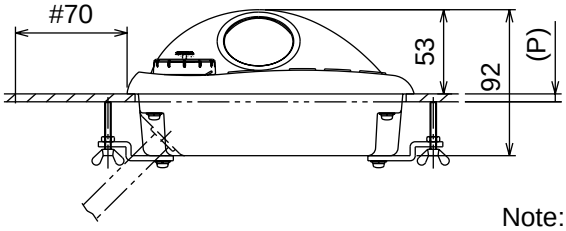

Note: P≦10

RCU-014

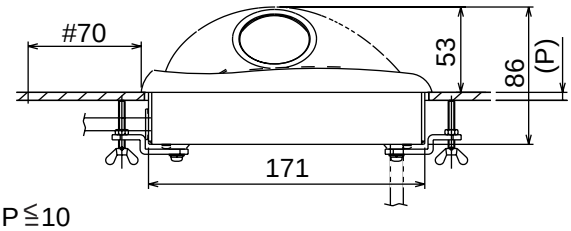

RCU-015/RCU-016

To connect RCU-016 in series with RCU-014

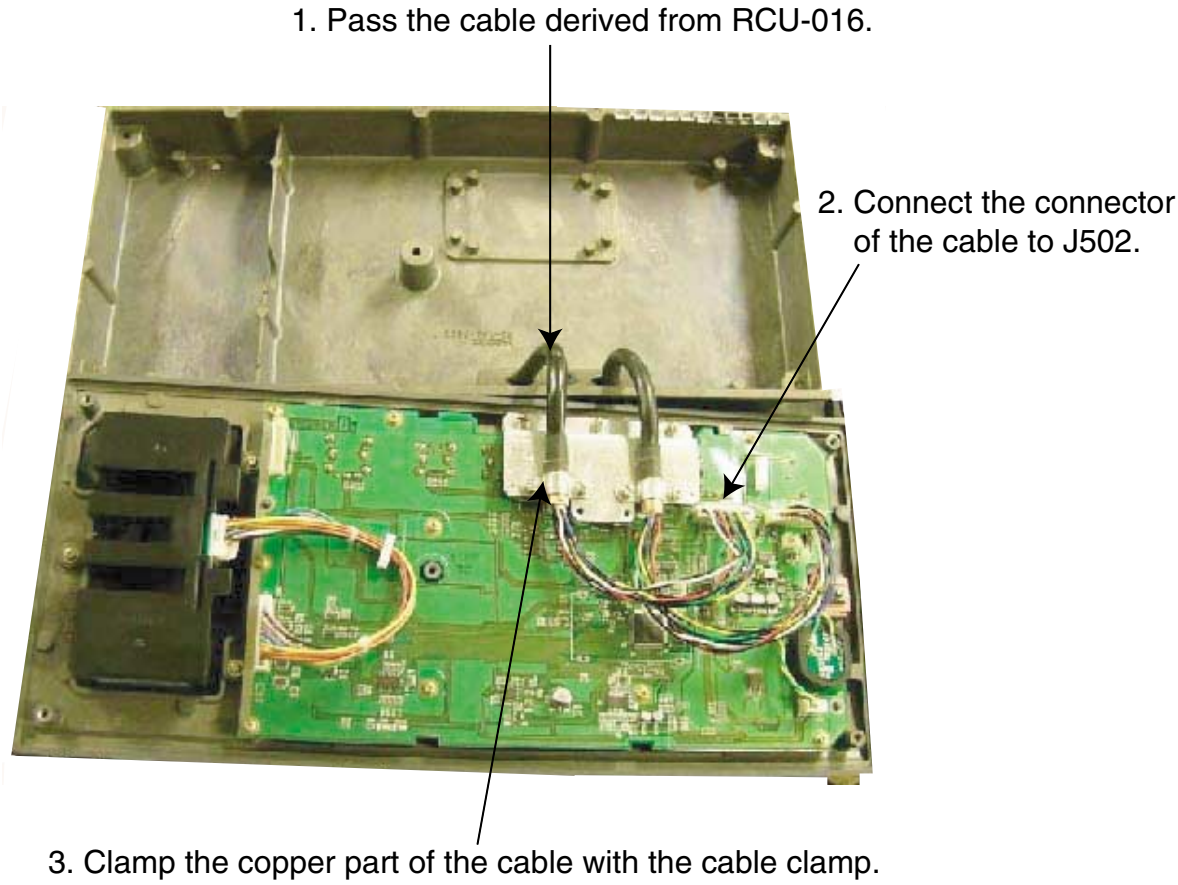

Inside of RCU-014

To change the cable entry

To change the cable entry from the side (default) to the bottom, modify the unit as shown below.

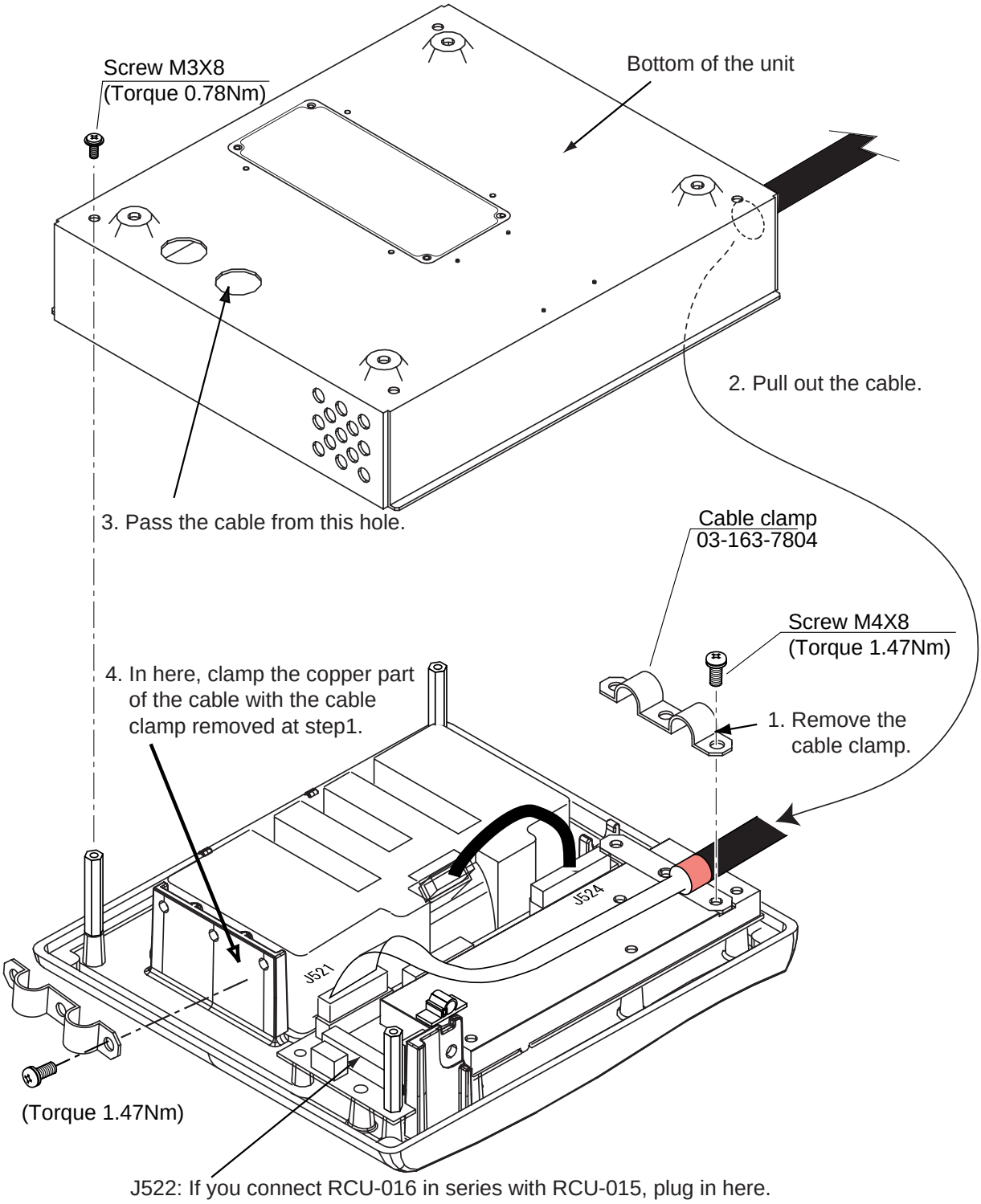

RCU-015/016: Changing cable entry

1.5 Processor Unit

Mounting considerations

When selecting a mounting location, keep in mind the following points:

- Locate the processor unit away from heat sources because of heat that can build up inside the cabinet.
- Locate the equipment away from places subject to water splash and rain.
- Leave sufficient space at the sides and rear of the unit to facilitate maintenance.
- A magnetic compass will be affected if the processor unit is placed too close to the magnetic compass. Observe the compass safe distances on page ii to prevent deviation of a magnetic compass.

Mounting procedure

1. Fix the unit with four M6 bolts, or self- tapping screws.

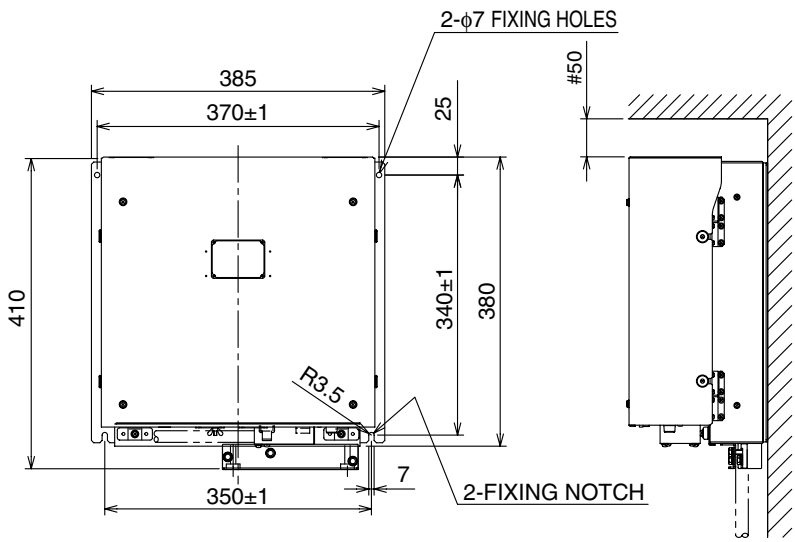

Floor mounting or bulkhead mounting

Note: If you fix the unit, cable entry upside, never remove the screw M3x10 that joints the upper case assy. and lower case assy. of the processor unit.

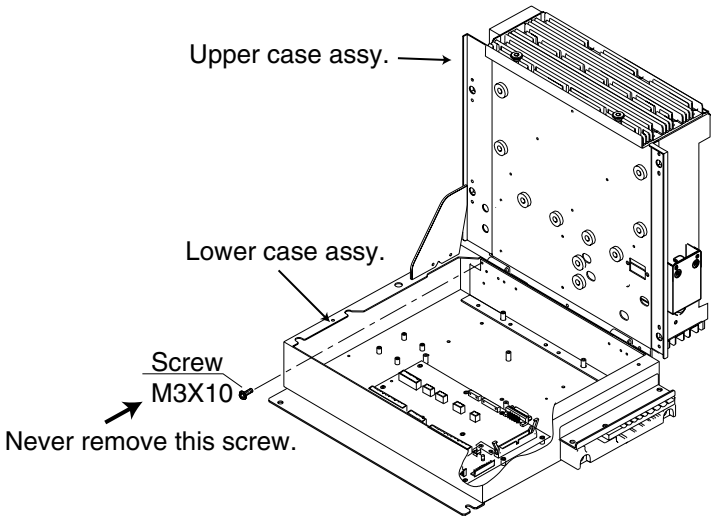

Processor unit

This page is intentionally left blank.

2. WIRING

2.1 Interconnection

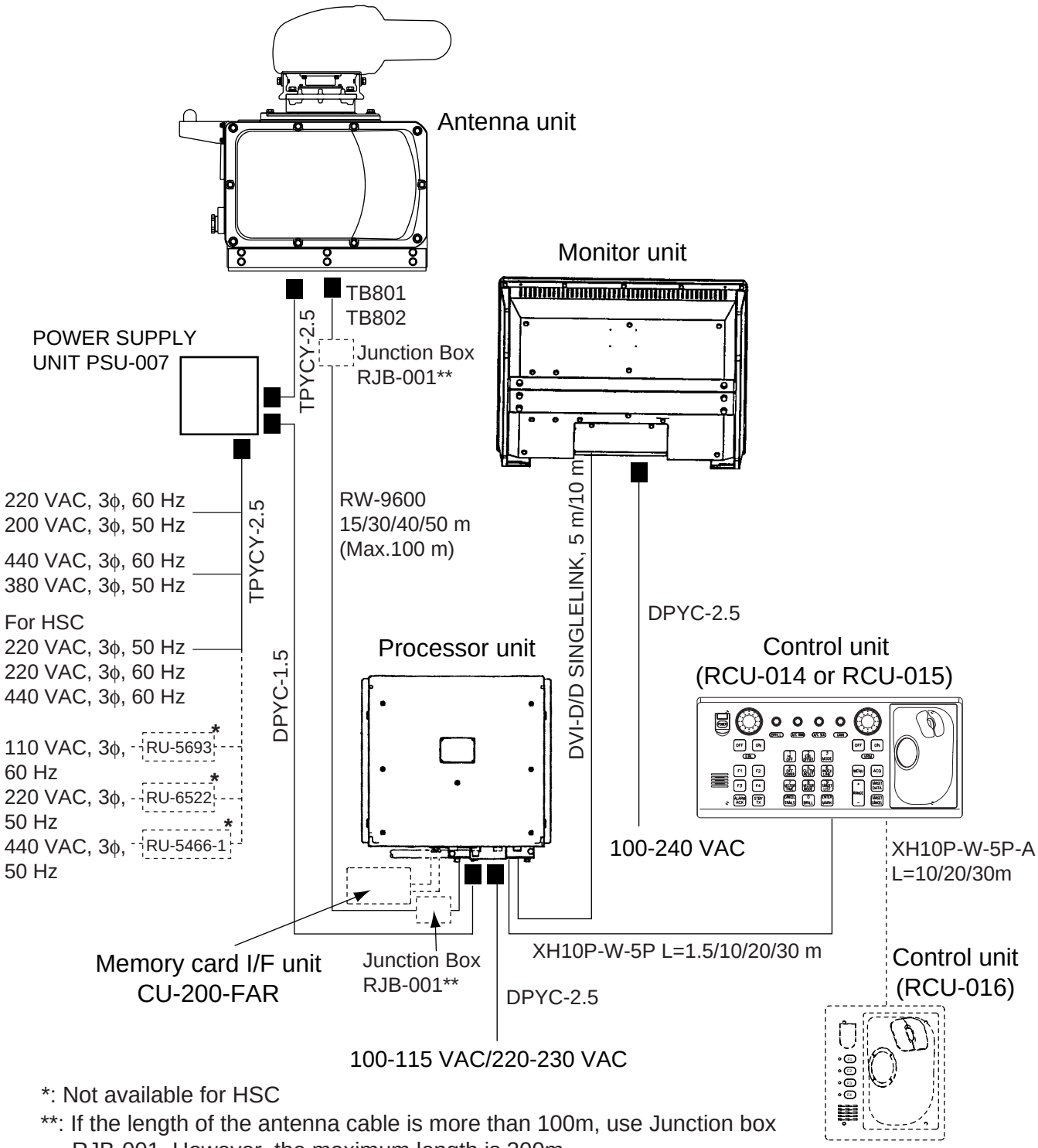

*: Not available for HSC

**: If the length of the antenna cable is more than 100m, use Junction box RJB-001. However, the maximum length is 300m.

■ : Cable requires fabrication

Standard Interconnection

2.2 Antenna Unit

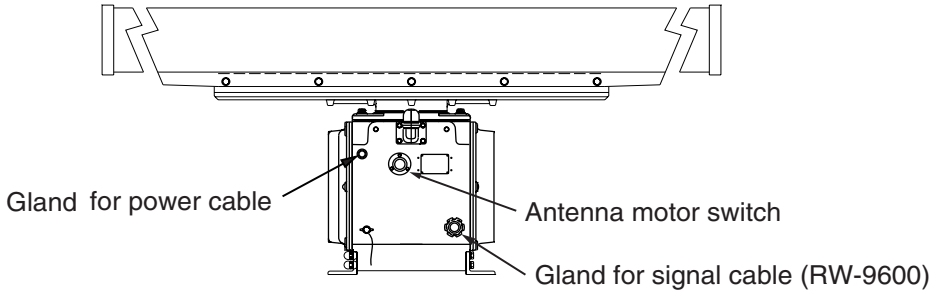

Antenna unit, bow view

1. Open the right side cover on the antenna unit with the hex wrench.
2. Unfasten the cable gland for the signal cable and remove the gasket, flat washers and blind lid.
3. Fabricate the signal cable RW-9600 as follows.
   a) Remove the outer sheath, armor and inner sheath as shown right.
   b) Unravel the shield to expose the wires in the inner layer.
   c) Shorten each core considering its location on the terminal board TB801.
   d) Trim each wire (except coaxial wire) considering its location on the terminal board.
   e) Trim the shield leaving 200 mm and attach crimp-on lug FV5.5-4.
   f) Remove insulation of each wire by about 6 mm.
   g) Fabricate the coaxial cable as shown right.

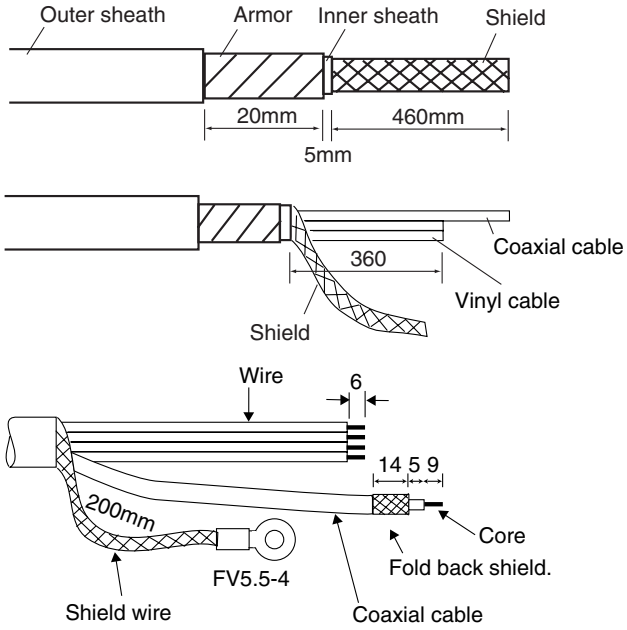

4. As shown in the figure below, slide the clamping gland, flat washer, gasket and flat washer on the signal cable.
5. Fold back armor and pass the flat washer as shown in the figure below. Cut and trim the armor around the flat washer.

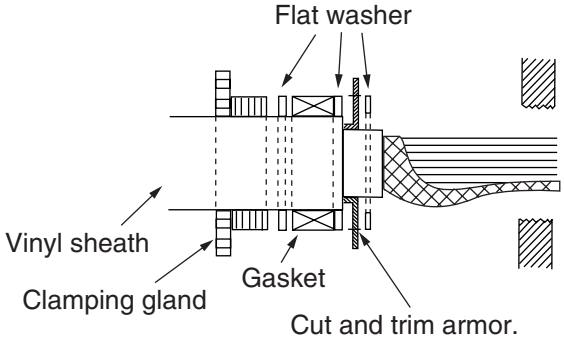

Passing clamping gland, washers and gasket on the signal cable

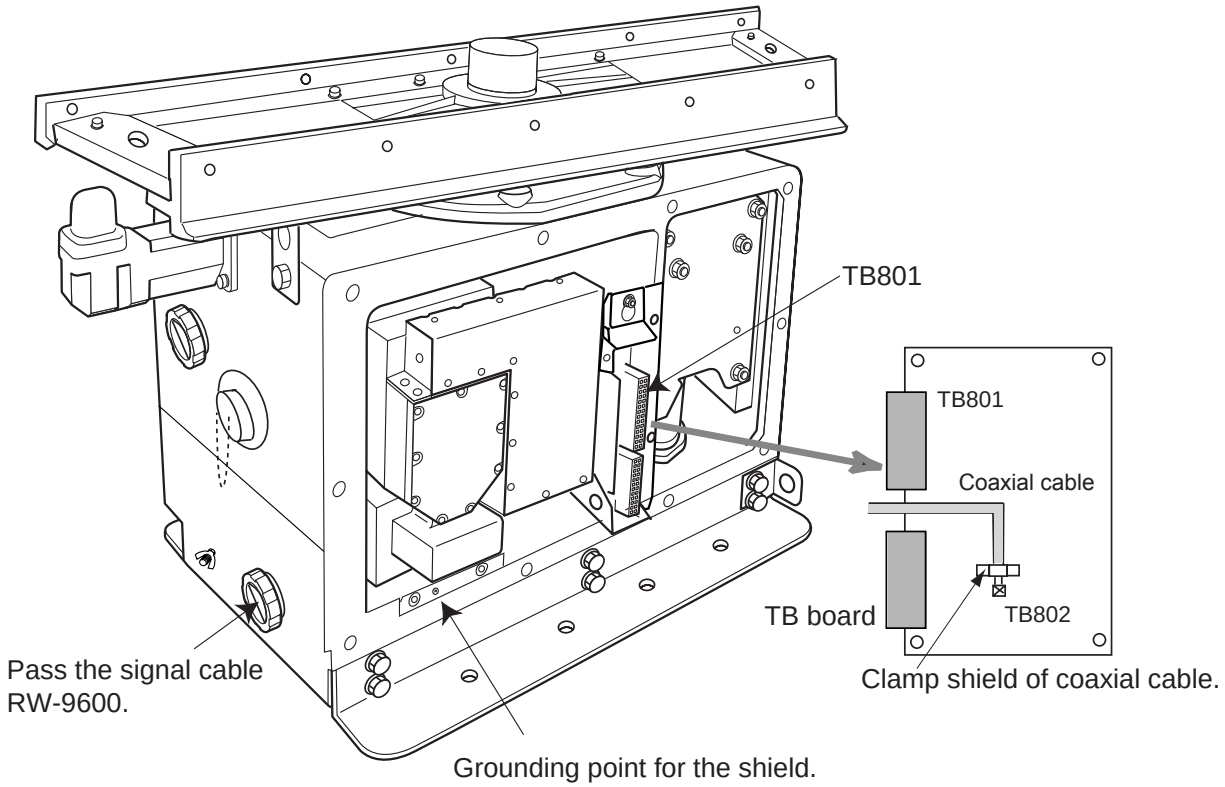

Antenna unit, port side view

6. Confirm that armor is grounded between two flat washers.
7. Coat the screw part of the clamping gland with silicone sealant and tighten it.
8. Using the opener, insert each core (except coaxial cable) to appropriate connector plug on the TB801.

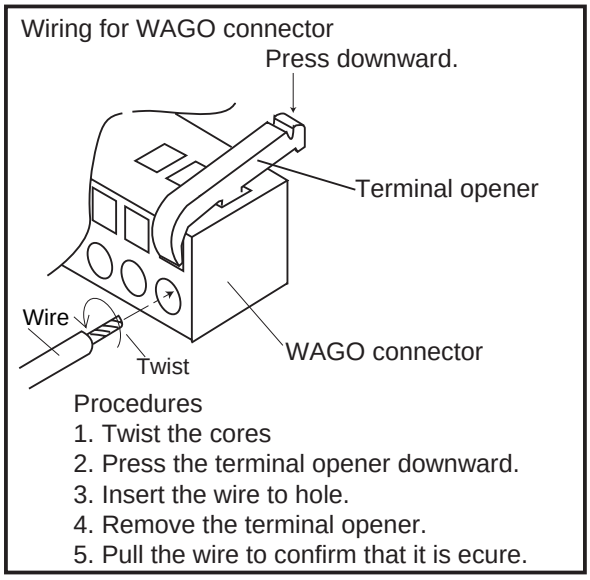

9. Loosen two screws and slide the TB board assembly upward and pull out it.
10. Connect the coaxial cable to TB802 on the TB board and clamp the shield with the cable clamp on the TB board.
11. Remount the TB board assembly.
12. Connect the shield wire to the grounding point as shown in the figure above.
13. Seal the cable gland with putty.

Fabricating power cable TPYCY-2.5

1. Open the left side cover on the antenna unit with the hex wrench.
2. Fabricate the cable as shown below. Use TPYCY-2.5 (Japan Industry Standard) cable or equivalent.

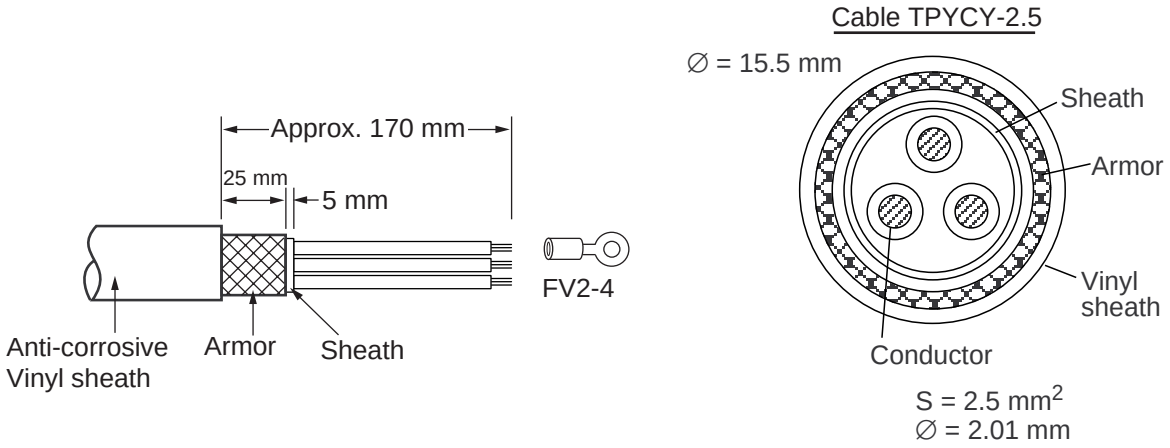

Fabricating the power cable TPYCY-2.5

3. At the power cable gland on the antenna unit, unfasten the clamping gland and remove gasket, flat washers and blind lid.
4. As shown in the figure below, slide the clamping gland, washers and gasket onto the power cable. Fold back the armor by 5 mm, and then pass it through the two flat washers.

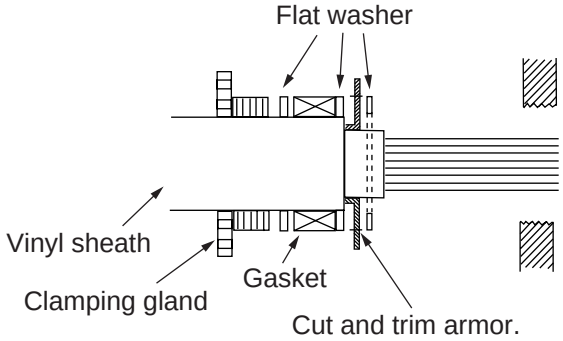

Passing clamping gland, washers and gasket on power cable TPYCY-2.5

5. Coat the screw part of the clamping gland with silicone sealant and tighten it.
6. Pass the power cable behind the terminal block, and then pass it through the locking wire saddle.
7. Fix the crimp-on-lug FV2-4 (blue) to each conductor.

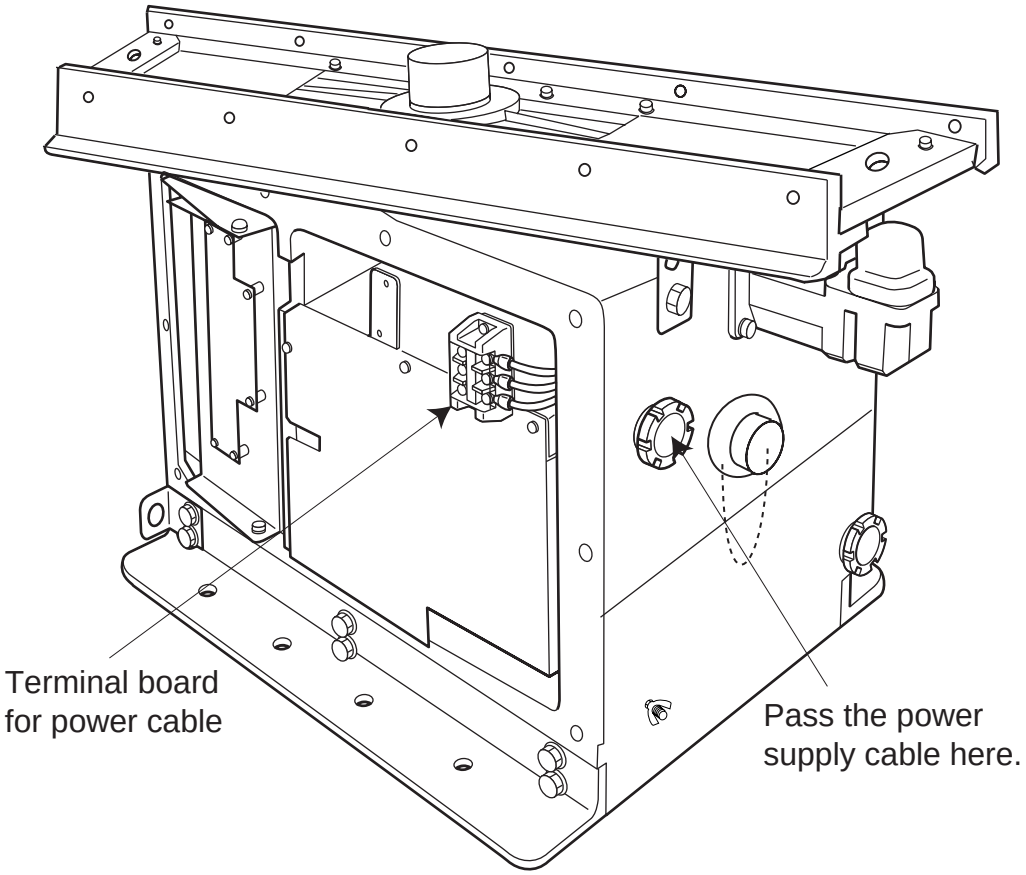

Antenna unit, left view

8. Connect crimp-lug to the terminal block referring to the interconnection diagram.
9. Attach the cover.
10. Seal the cable gland with putty.

2.3 Monitor Unit

Two cables are terminated at the display unit: the signal cable from the processor unit (5 m or 10 m cable) and the power cable from the ship's mains. The signal cable comes with a connector preattached to it for connection to the display unit. Fabricate the power cable as below. Use DPYC-2.5 (Japan Industry Standard) cable or the equivalent.

Fabricating the power cable

1. Cut armor of the cable by 40 mm.
2. Cut vinyl sheath by 35 mm.
3. Remove insulation of wires by about 10 mm. Fix crimp-on lugs to the cores.
4. Peel paint of the armor by 40 mm.
5. Cover the end of armor with vinyl tape.

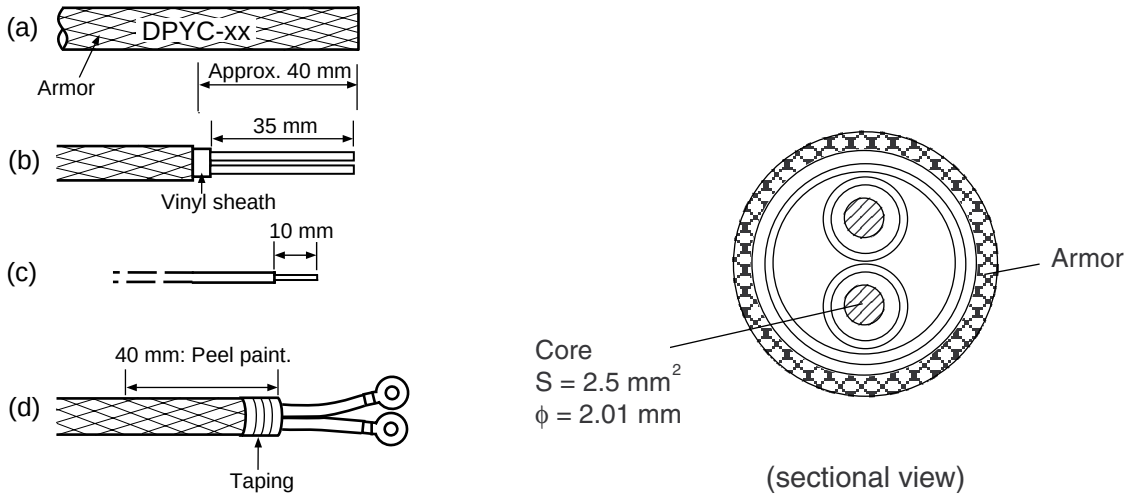

Fabricating power cable DPYC-2.5

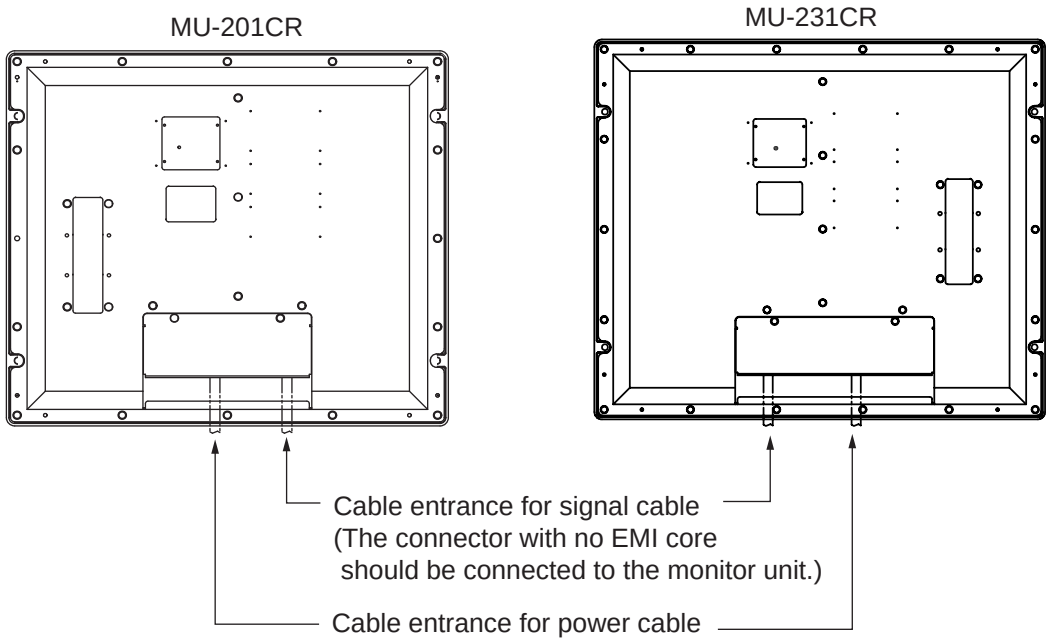

Monitor unit (rear panel)

2.4 Processor Unit

Four cables are terminated at the processor unit: the antenna unit cable, display unit cable, control unit cable and the power cable. Cables other than the power cable come with a connector preattached to them for connection to the processor unit. Fabricate the power cable as below. For the power cable, use DPYC-2.5 (Japan Industry Standard) or the equivalent.

Note: If one line of AC is grounded, connect it to “C” (common) terminal and the other line to “H” (hot).
Pass the AC line through a double-contact breaker (shipyard supply).

Fabricating the power cable

1. Cut armor of the cable by 40 mm.
2. Cut vinyl sheath by 35 mm.
3. Remove insulation of wires by about 10 mm. Fix crimp-on lugs to the cores.
4. Peel paint of the armor by 40 mm.
5. Cover the end of armor with vinyl tape.

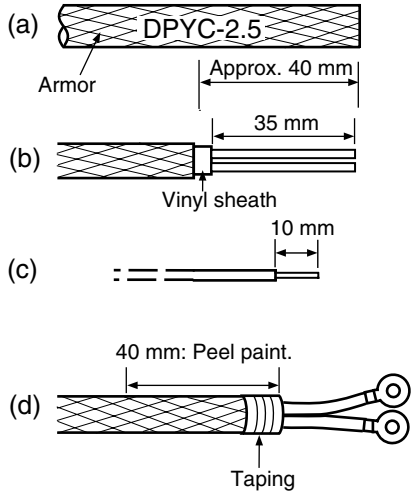

Fabricating power cable DPYC

Connection of cables

The power cable is connected to the terminal board on the rear panel and the signal cable from the Monitor unit is connected to the DVI-D connector. Other cables are connected to the printed circuit board 03P9342.

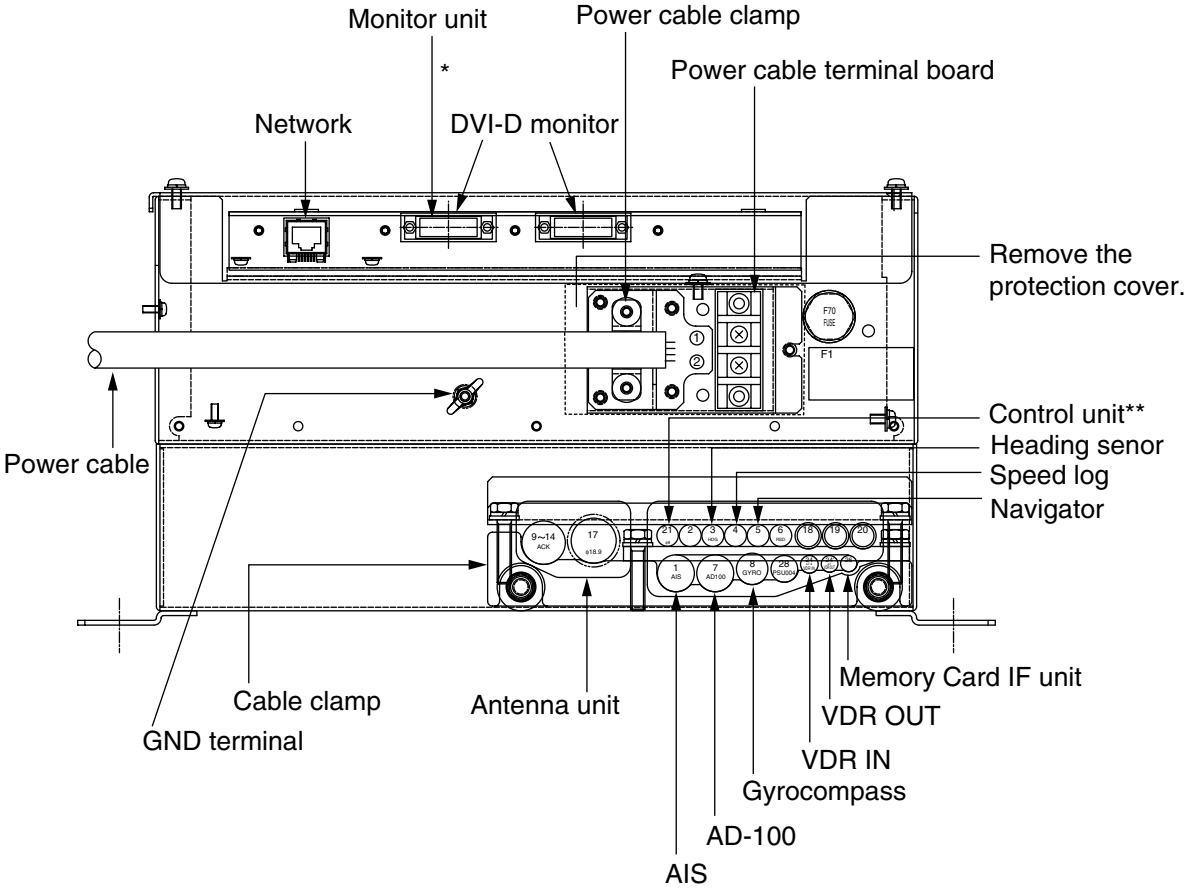

Processor unit

*: The connector side which EMI core is attached should be connected to the processor unit.

**: The configuration of optional cables between the processor unit and the control unit is as follows. Note that the cable fabrication for each end is different.

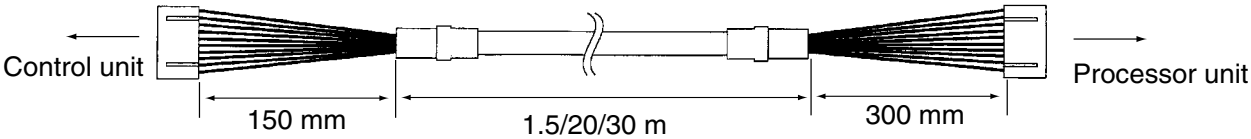

Cable XH10P-W-5P L=20/30M

When the RCU-016 is installed, optional cable (XH10P-W-5P-A, L=10/20/30M) is required. Cable fabrication for each end is the same.

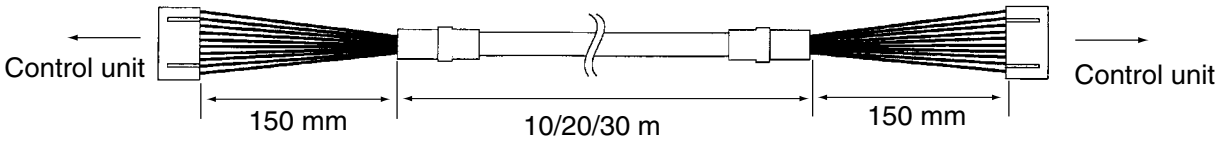

XH10P-W-5P-A L=10/20/30M

Location of connectors

Open the processor unit as follows and the 03P9342 board appears.

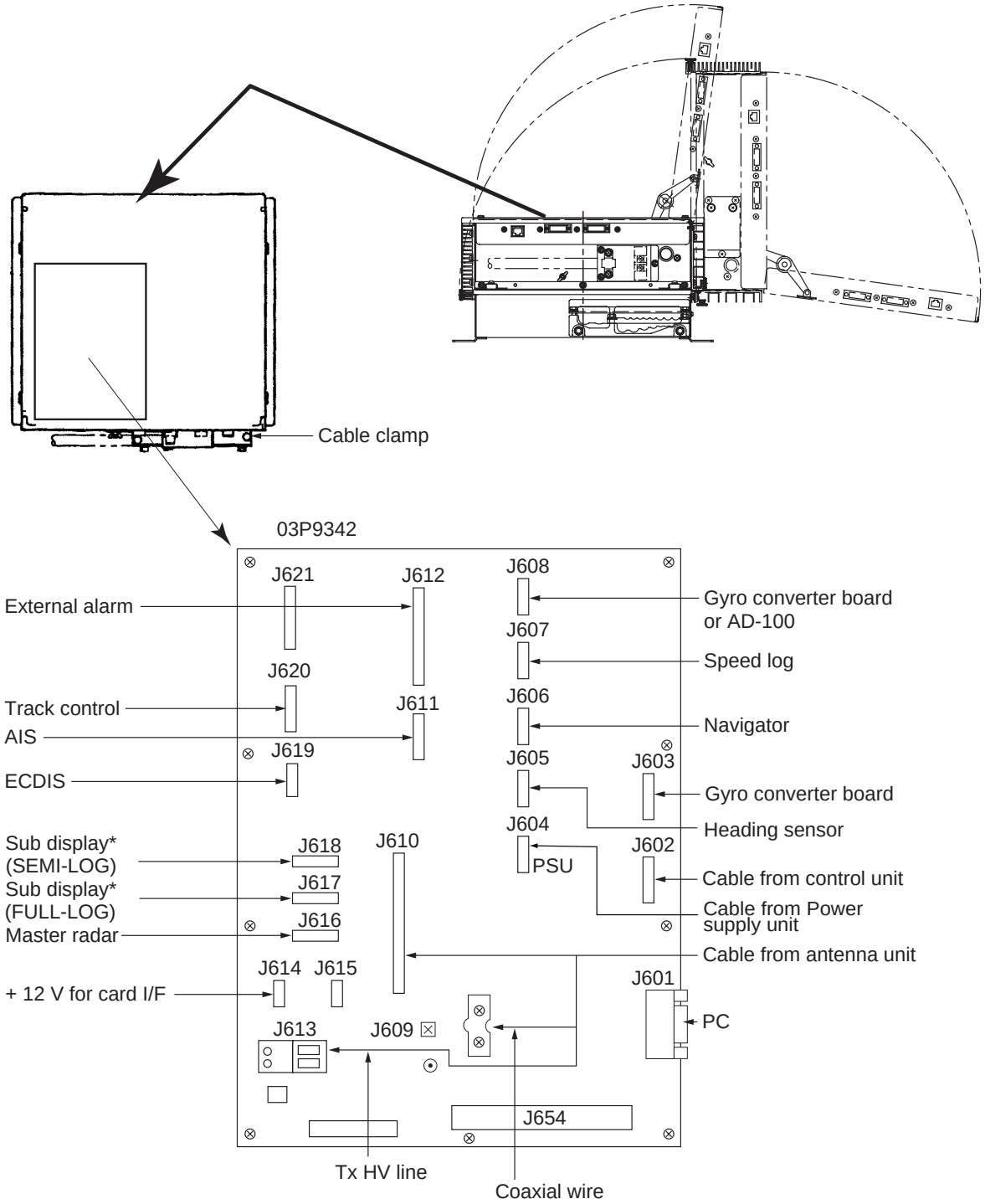

03P9342

*: See page 2-11 for details.

Cable fabrication for the cables connected to the 03P9342 board

- Signal cable RW-9600 (Between antenna unit and processor unit)

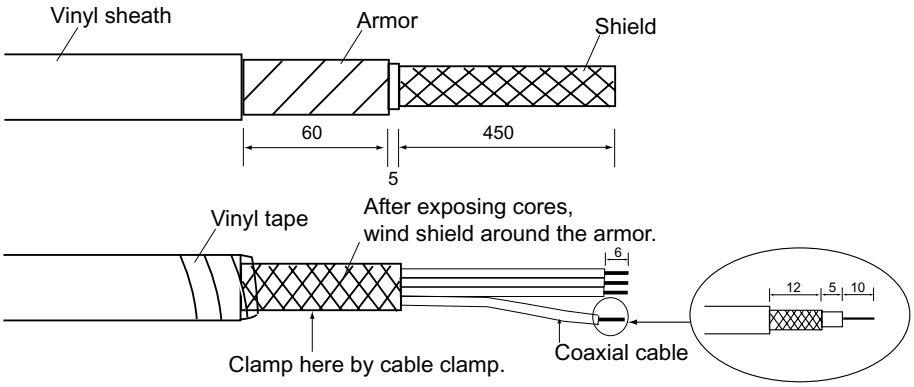

- Other cables for optional units
  Use TTYCS-1 or TTYCS-4 (Japan standard cable) or equivalent.

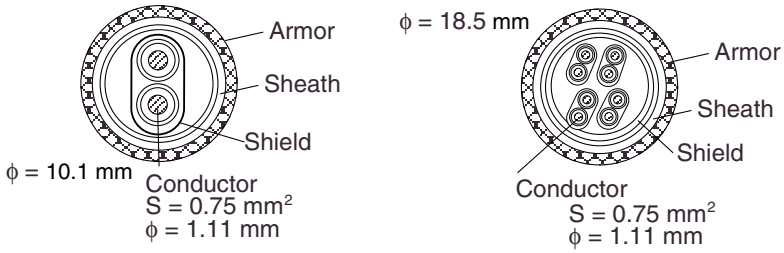

TTYCS-1 TTYCS-4

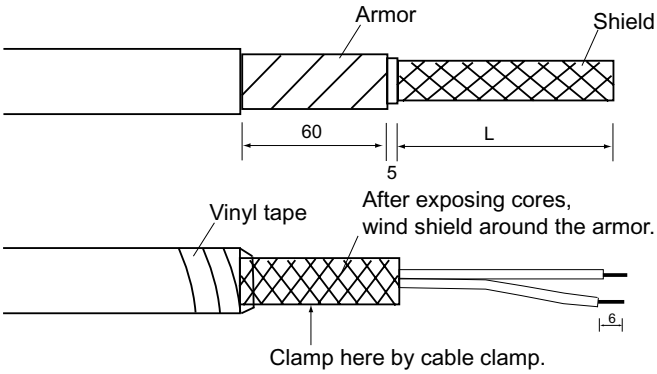

L= Depends on equipment connected. Measure at the processor unit.

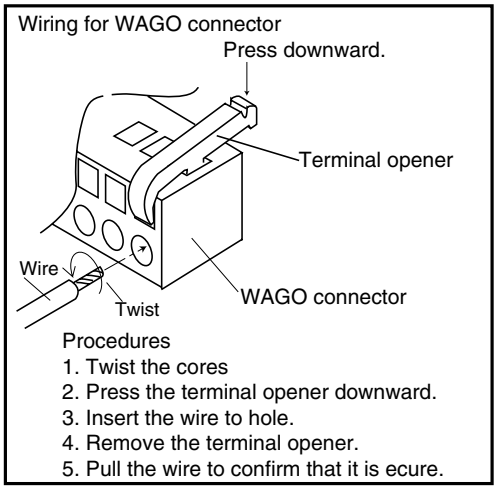

Connection of Sub-display

A conventional remote display and/or FAR-2107 series radar can be connected to J617 and J618 in the processor unit as a sub-display. However, the control for GAIN and STC are different depending on J617 and J618. Refer to the table to connect sub-displays.

Port		Conventional remote display	FAR-2107 series radar
J617 (FULL-LOG)	Overall gain	Even if input video level is adjusted to 4 Vp-p, the gain is 8 db lower than that on the master radar.	The gain is 8 dB lower than that on the master radar.
	GAIN control	The GAIN control is effective.	The GAIN control has no effect.
	STC control	The STC control is effective.	The STC control has no effect.
J618 (SEMI-LOG)	Overall gain	When input video level is adjusted to 4 Vp-p, the gain becomes the same as that on the master radar.	The gain is almost same as that on the master radar.
	GAIN control	The GAIN control is effective.	The GAIN control has no effect.
	STC control	The STC control is effective, however this control is added on the signal adjusted by the master radar. So this port is not recommended to use .	The STC control has no effect.

2.5 Power Supply Unit

Wire the unit as shown in the interconnection diagram.

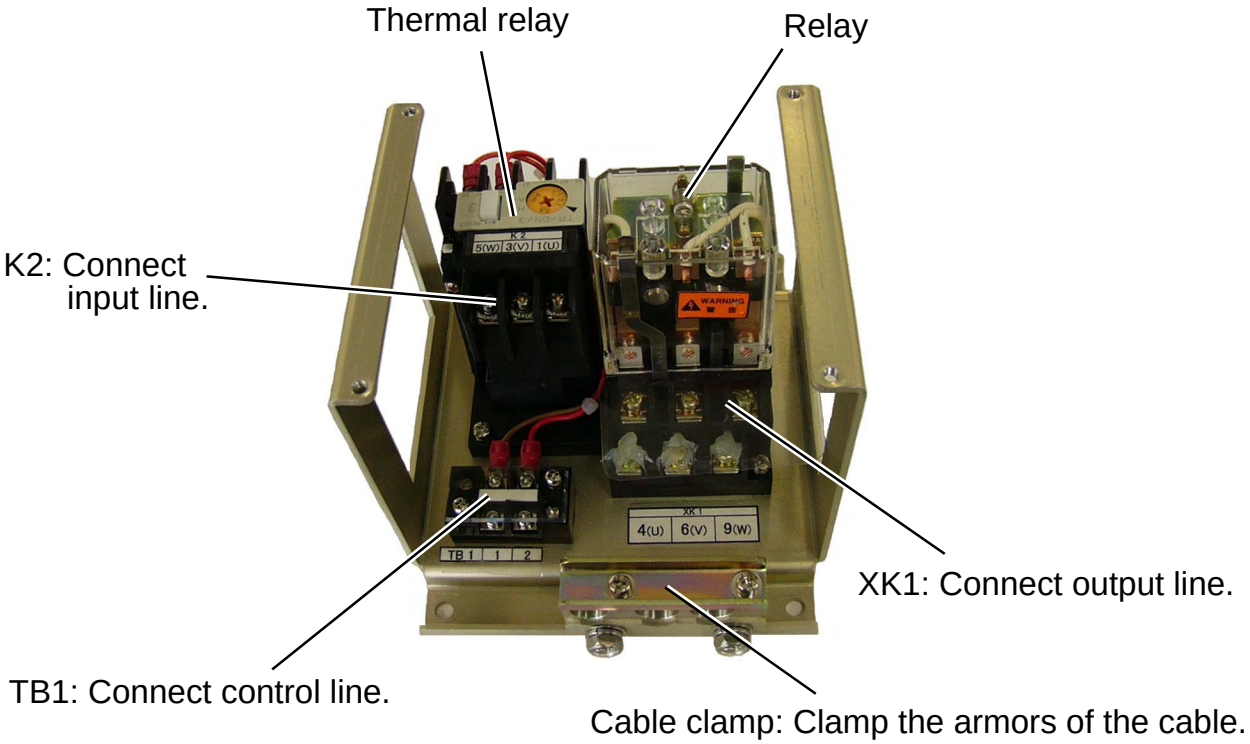

Power supply unit PSU-007

2.6 Changing AC Power Specification of Processor Unit

To change AC power specification between 100 VAC and 220 VAC, add or remove jumper connector P108 on the PWR board 03P9339 and change the fuse on the processor unit according to ship's mains as shown in the table below. The figure on the next page shows the location of the fuse and the jumper connector on the PWR board. Also, adjustment of the overvoltage detection circuit is required.
Note: To change from 220VAC to 100VAC, locally prepare the jumper connector, referring to the figure on the next page (VH10P connector housing is fitted at J108).

Power supply	Fuse	Jumper connector P108
100 VAC	10A	Added
220 VAC	5A	Removed

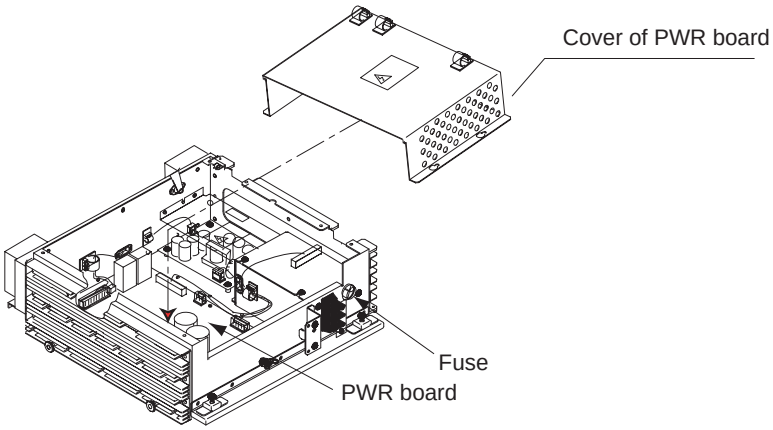

Upper part of processor unit
(SPU assembly omitted)

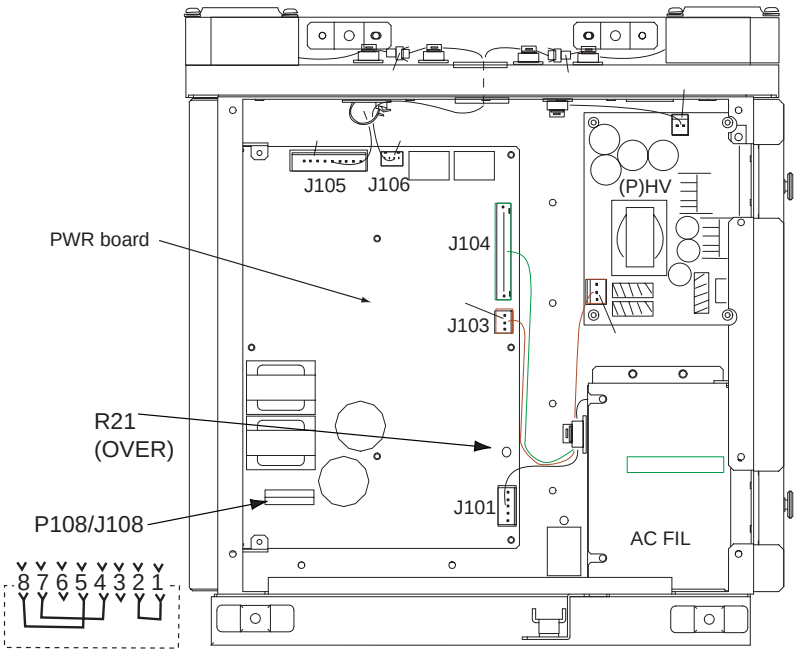

Jumper connector
(VH10P)

How to adjust the overvoltage detection circuit:

1. Add or remove the jumper connector P108 and change the fuse.
2. Rotate R21 fully clockwise on the PWR board.
3. Connect a variable transformer between ship's mains and the input power terminal board TB-1 of the processor unit.
4. Adjust the variable transformer output (i.e., input voltage to the processor unit) as follows.
   For 100 VAC set: 144 VAC
   For 220 VAC set: 288 VAC
5. Turn on the radar and rotate the R21 counterclockwise gradually until the overvoltage detection circuit functions (i.e., power supply cuts off).
6. Lower the output voltage of the variable transformer and confirm that the radar automatically turn on with a voltage lower than 142VAC or 284VAC.
7. Gradually increase the output voltage of the variable transformer and confirm that the overvoltage detection circuit functions at 144V or 288VAC of the variable transformer output.
8. Assemble and connect the processor unit.

This page is intentionally left blank.

3. SETTING AND ADJUSTMENT

3.1 DIP Switch Setting

The processor unit is shipped for model FAR-2137S. If your model is FAR-2837S/2137S-BB, change the DIP switch setting as follows.

1. Remove the top cover of the processor unit.
2. Open the SPU assembly block and remove the shield cover.

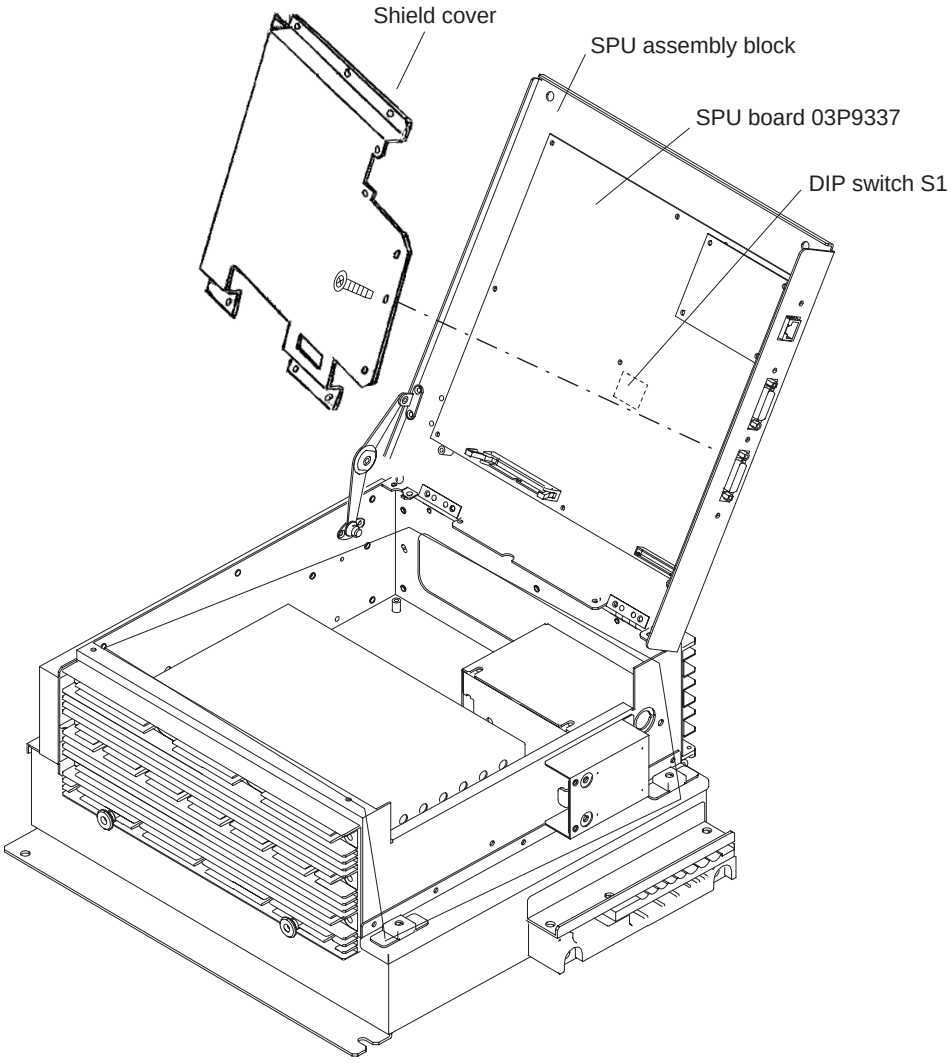

3. Set the DIP switch S1 as follows.

S1	Monitor SXGA for FAR-2137S (Default)	Monitor UXGA for FAR2837S	FAR-2137S-BB
1	OFF	ON	OFF
2	OFF	OFF	ON
3	Not used.		
4			

3.2 Initializing tuning

1. Transmit the radar on 48 nm range and rotate the GAIN knob to show 70-80 of the gain bar.
2. Roll the trackball to choose the MENU box at the right side of the screen and then push the left button.
3. Roll the wheel to choose 1 ECHO and then push the wheel.

[ECHO]

1 BACK
2 2ND ECHO REJ
OFF/ON
3 TUNE INITIALIZE
4 PM
OFF/ON
5 SART
OFF/ON
6 WIPER
OFF/1/2

ECHO menu

Bold: Default settings
(Same for all menu illustrations)

4. Roll the wheel to choose 3 TUNE INITIALIZE.
5. Push the wheel to initialize automatic tuning.
   After a while, echoes appear on the screen. The message “TUNE INITIALIZE” appears in red during automatic tuning. When this message disappears, the tuning is completed. If necessary adjust the GAIN to show echoes clearly.
6. Push the right button twice to close the menu.

3.3 Heading Alignment

You have mounted the antenna unit facing straight ahead in the direction of the bow. Therefore, a small but conspicuous target dead ahead visually should appear on the heading line (zero degrees).

In practice, you will probably observe some small bearing error on the display because of the difficulty in achieving accurate initial positioning of the antenna unit. The following adjustment will compensate for this error.

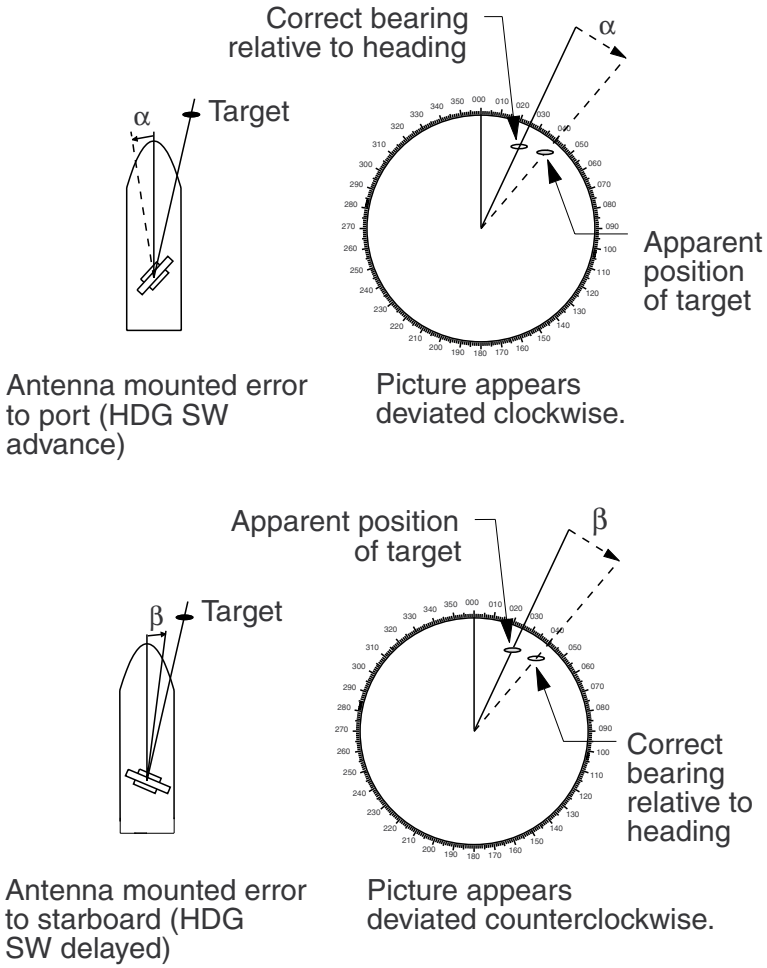

Heading alignment

1. Select a stationary target echo at a range between 0.125 and 0.25 nm, preferably near the heading line.
2. Operate the EBL control to bisect the target echo.
3. Read the target bearing.
4. Measure the bearing of the stationary target on the navigation chart and calculate the difference between actual bearing and apparent bearing on the radar screen.
5. Press the [MENU] key to show the main menu.
6. While pressing and holding down the [HL OFF] key, press the [MENU] key five times.

7. Press [0] key to show the [INITIALIZE] menu.

```
[INITIALIZE]
1 BACK
2 [ECHO ADJ]
3 [SCANNER]
4 [INSTALLATION]
5 [OWN SHIP INFO]
6 [ARP PRESET]
7 [NETWORK]
8 [OTHER]
```

Note: See next page to access the INITIALIZE menu with the trackball style control unit RCU-015.

8. Press [2] key to open the [ECHO ADJ] menu.

```
[ECHO ADJ]
1 BACK
2 CABLE ATT ADJ
  AUTO/MANUAL
  30
3 HD ALIGN
  000.00°
4 TIMING ADJ
  000
5 MBS
  0
6 DEFAULT ANT HEIGHT
  5/7.5/10/15/20/
  25/30/35/40/45/
  more 50 m
7 NEAR STC CURVE
  2/2.5/3/3.5
8 MID STC CURVE
  3/4/5/6
9 FAR STC CURVE
  6/7/8
0 RING SUPPRESSION
  0
```

ECHO ADJ menu

9. Press [3] key to choose the HD ALIGN option.
10. Key in the bearing difference. The setting range is 0 to 359.9 °
11. Confirm that the target echo is displayed at correct bearing on the screen.
12. Press the [MENU] key to finish.

How to Access the Installation Mode with the RCU-015 Trackball Style Controller

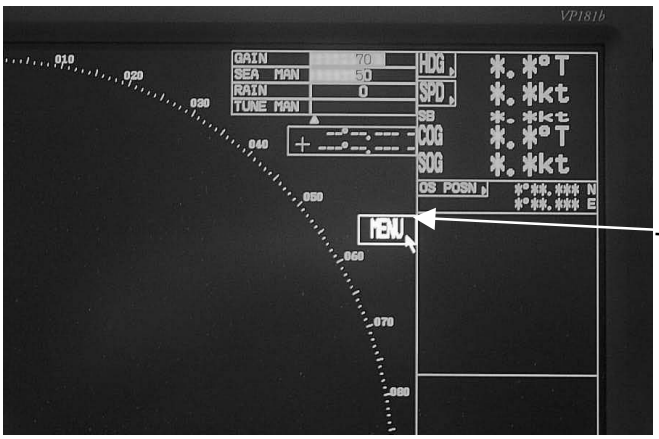

1. By using the trackball, move the pointer until it highlights the MENU box as shown. **DO NOT CLICK** the menu box, just leave the arrow over the menu.

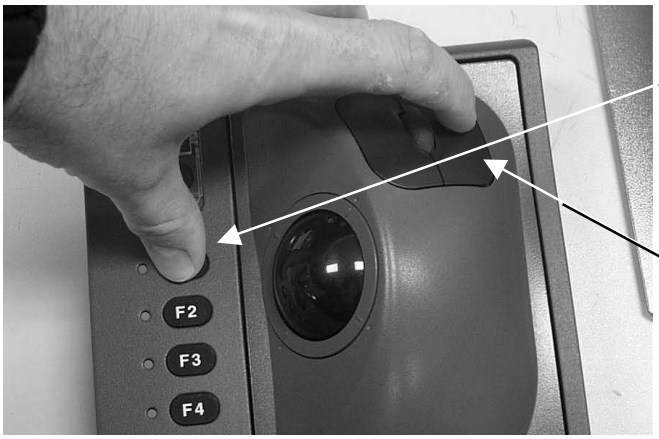

2. Press and hold down the F1 key. Keep it held down during the next step.

3. Then, click on the right controller button 5 times. You should hear a “triple Beep” on the fifth press.

The INITIALIZE menu will appear. Click on INSTALLATION to access the installation menus.

3.4 Adjustment Sweep Timing

Sweep timing differs with respect to the length of the signal cable between the antenna unit and the processor unit. Adjust sweep timing at installation to prevent the following symptoms:

- The echo of a “straight” target (for example, pier), on the 0.25 m range, will appear on the display as being pulled inward or pushed outward. See Figure below.
- The range of target echoes will also be incorrectly shown.

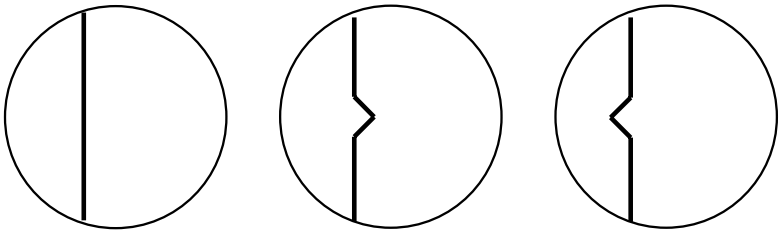

(1) Correct (2) Target pushed inward (3) Target pushed outward

Examples of correct and incorrect sweep timings

1. Transmit on the 0.25 nm range.
2. Adjust radar picture controls to display picture properly.
3. Select a target echo which should be displayed straightly.
4. Press [4] key to choose the [TIMMING ADJ] on the [ECHO ADJ] menu.

```
[ECHO ADJ]
1 BACK
2 CABLE ATT ADJ
    AUTO/MANUAL
    30
3 HD ALIGN
    000.00°
4 TIMING ADJ
    000
5 MBS
    0
6 DEFAULT ANT HEIGHT
    5/7.5/10/15/20/
    25/30/35/40/45/
    more 50 m
7 NEAR STC CURVE
    2/2.5/3/3.5
8 MID STC CURVE
    3/4/5/6
9 FAR STC CURVE
    6/7/8
0 RING SUPPRESSION
    0
```

5. Rotate the wheel to set a suitable value which causes the target to be displayed straightly. The setting range is 0 to 4095.
6. Press the [MENU] key to finish.

3.5 Suppressing Main Bang

If main bang appears at the screen center, suppress it as follows.

1. Transmit the radar on a long range and then wait ten minutes.
2. Adjust gain to show a slight amount of noise on the display.
3. Select the 0.25 nm range. Adjust sea clutter to suppress.
4. Press [5] key to choose the MBS on the [ECHO ADJ] menu.

```
[ECHO ADJ]
1 BACK
2 CABLE ATT ADJ
    AUTO/MANUAL
    30
3 HD ALIGN
    000.00°
4 TIMING ADJ
    000
5 MBS
    0
6 DEFAULT ANT HEIGHT
    5/7.5/10/15/20/
    25/30/35/40/45/
    more 50 m
7 NEAR STC CURVE
    2/2.5/3/3.5
8 MID STC CURVE
    3/4/5/6
9 FAR STC CURVE
    6/7/8
0 RING SUPPRESSION
    0
```

5. Rotate the wheel to set a suitable value so that the main bang disappears. The setting range is 0 to 255.
6. Press the [MENU] key to finish.

3.6 Other Settings

ECHO menu setting

Open the [ECHO ADJ] menu as described on page 3-2.

```
[ECHO ADJ]
1 BACK
2 CABLE ATT ADJ
    AUTO/MANUAL
    30
3 HD ALIGN
    000.00°
4 TIMING ADJ
    000
5 MBS
    0
6 DEFAULT ANT HEIGHT
    5/7.5/10/15/20/
    25/30/35/40/45/
    more 50 m
7 NEAR STC CURVE
    2/2.5/3/3.5
8 MID STC CURVE
    3/4/5/6
9 FAR STC CURVE
    6/7/8
0 RING SUPPRESSION
    0
```

To close the menu, press the [MENU] key.

CABLE ATT ADJ

Before adjusting, set the radar as follows:
IR: 2, ES: off, EAV: off, 24nm range, long pulse
(Same as default setting of PICTURE1)
To adjust the cable attenuation manually, choose MANUAL by pressing [2] and the [ENTER] key, and then rotate the wheel so that noise just appears on the screen when the gain is set to 80. Default setting is 30 for the antenna cable length of 15m. The setting range is 0 to 73. To adjust automatically, choose AUTO and press the [ENTER] key. The message “(CABLE ATT ADJ” appears in red at the bottom of the screen. It takes about five minutes to complete the adjustment, after which the exedra goes into stand-by.

DEFAULT ANT HEIGHT

Select height (m) of the radar antenna unit from the sea surface among 5, 7.5, 10, 15, 20, 25, 30, 35, 40, 45 and “more 50 m”.

NEAR STC CURVE, MID STC CURVE AND FAR STC CURVE

Use the default setting. Change the setting if desired according to sea condition.

RING SUPPRESSION

This is mainly used to removes “ring” noise which appears in the waveguide-type radar. Adjust so the rings disappear at the range of 0.125 nm. The setting range is 0 to 255.

Scanner setting

1. Open the INITIALIZE menu described on page 3-3 and 3-4.
2. Press [3] key to open the SCANNER menu.

```
[SCANNER]
1 BACK
2 BLIND SECTOR 1
    START 000°
    ANGLE 000°
3 BLIND SECTOR 2
    START 000°
    ANGLE 000°
4 ANT REVOLUTION
    LO/HI/AUTO
5 ANT SW
    OFF/ON
6 ANT STOPPED
    STBY/TX
```

To close the menu, press the [MENU] key.

BLIND SECTOR 1 and BLIND SECTOR 2

Set area (up to 2) where no radar pulses will be transmitted. For example, set the area where an interfering object at the rear of the scanner would produce a dead sector (area where no echoes appear) on the display. To enter an area, enter start bearing relative the heading and dead sector angle. To erase the area, enter 0 for both the START and ANGLE sections. The setting range of START is 0 to 359° and ANGLE is 0 to 180°.

ANT REVOLUTION

Not used for FAR-2137S/2837S/2137S-BB.

ANT SW and ANT STOPPED

This is used for antenna maintenance by serviceman.

INSTALLATION menu setting

Open the INSTALLATION menu by pressing [4] key on the INITIALIZE menu.

```
[INSTALLATION]
1  BACK
2  RADAR
     MAIN/SUB
3  RANGE UNIT *
     NM/SM/km/kyd
4  RADAR NO**
     1/2/3/4/5/6/7/8
5  RADAR POSN
     FORE/MAIN TOP/
     MAIN 2ND/MAIN 3RD/
     AFT/PORT/
     STAR BOARD
6  MODEL
     6/12/25 UP/25 DOWN/
     50/30 UP/30 DOWN/60
7  TYPE
     IMO/A/B/C
8  ON TIME
     XX.XH
9  TX TIME
     XX.XH
0  PM GAIN ADJ
     XXX
```

*: Not displayed on IMO-type radar.

**: No.1-4: with antenna unit
No.5-8: without antenna unit

RADAR

Choose main radar or sub radar.

RANGE UNIT

Choose NM, SM, km or kyd (kilo yard) as appropriate, however-IMO type radar is “NM” only.

RADAR NO and RADAR POSN

For multiple radar system using the network hub, set number (name) and antenna position for each system to easily distinguish the radar configuration.

MODEL

Confirm the model of your radar. If the setting of this item is different from your model (combination of the antenna unit), the radar functions abnormally.
Select “30 UP” for FAR-2137S/ 2837S/ 2137S-BB.

TYPE

Choose type of radar: IMO, A, B, or C.

ON TIME and TX TIME

These items show number of hours the radar has been turned on and transmitted, respectively. Value can be changed; for example, after replacing magnetron TX Time can be reset to 0.

PM GAIN ADJ

When you choose this item, the radar setting changes as follows.

RANGE:	24 NM
PULSE:	LONG
BLIND SECTOR:	OFF
STC:	OFF by Manual
RAIN:	OFF by Manual
ECHO STRECH:	OFF
ECHO AVERAGE:	OFF
VIDEO CONTRAST:	A
TUNE:	AUTO

1. Adjust the GAIN control so that a slight amount of white noise appears on the screen. Arcs for performance monitor appear on the screen (Fig.1).
2. Adjust PM GAIN ADJ so that outer arc just disappears (Fig.2).

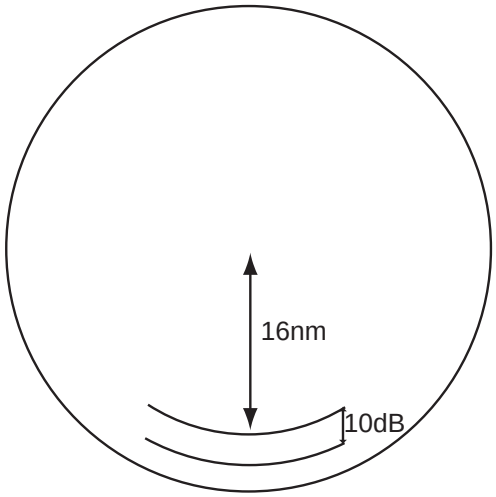

Fig.1

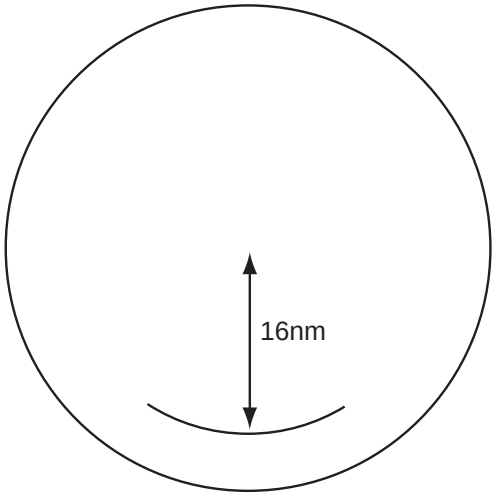

Fig.2

OWN SHIP INFO menu setting

Open the OWN SHIP INFO menu by pressing [5] key on the INITIALIZE menu.

```
[OWNSHIP INFO]
1  BACK
2  LENGTH/WIDTM
     LENGTH  100 m
     WIDTH    50 m
3  SCANNER POSN
     BOW  0 m
     LEFT  0 m
4  GPS1 ANT POSN
     BOW  0 m
     LEFT  0 m
5  GPS2 ANT POSN
     BOW  0 m
     LEFT  0 m
6  CONNING POSN
     BOW  0 m
     LEFT  0 m
```

LENGTH/WIDTH and SCANNER POSN

To inscribe own ship shape on the screen when you choose it on the menu, enter length and width of the ship and antenna position from the bow and left sides.
The setting ranges are as follows.

LENGTH: 0 to 999 m
WIDTH: 0 to 99 m
BOW: 0 to 999 m
LEFT: 0 to 99 m

GPS 1 ANT POSN and GPS 2 ANT POSN

These items are needed for AIS information. Enter the GPS antenna position from the bow and left sides. The setting ranges are the same as above.

CONNING POSN

Enter the conning position in the wheelhouse, from the bow and left sides. The setting ranges are the same as above.
When you set the display reference point to the conning position, these values are used to correct the radar antenna position.

ARPA PRESET menu setting

Open the ARPA PRESET menu by pressing [6] key on the INITIALIZE menu.

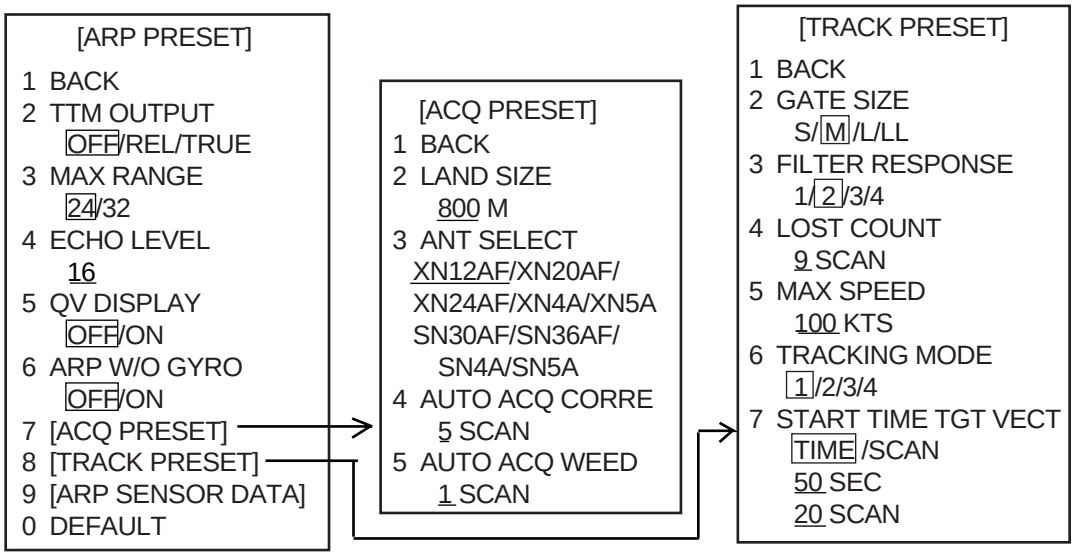

TTM OUTPUT

Set the output format of tracked targets among OFF, REL and TRUE.

OFF:	No output
REL (relative):	Target bearing from own ship, degree relative. Target course, degree relative.
TRUE:	Target bearing, degree true. Target course, degree true.

MAX RANGE

Choose the ARPA tracking range, 24 or 32 nm.

ECHO LEVEL

Set the detection level of echoes. The setting range is 1 to 31.

QV DISPLAY

OFF: Normal picture
ON: Quantized picture; always off at power on

ARPA W/O GYRO

If a gyrocompass is not connected, choose the ARPA function, ON(working) or OFF (no working).

LAND SIZE

Set the land size in units of 100 m. The setting range is 100 to 1000 m.

ANT SELECT

Set the antenna radiator type of your radar.

AUTO ACQ CORRE

Set the correlation count of automatic acquisition. The setting range is 3 to 10.

AUTO ACQ WEED

Set the cancel count of automatic acquisition. The setting range is 1 to 5.

GATE SIZE

Set the gate size among S, M, L, or LL.

FILTER RESPONSE

Set the filter response function. The setting range is 1 to 4.

LOST COUNT

Set the lost count. The setting range is 1 to 20.

MAX SPEED

Set the maximum tracking speed. The setting range is 40 to 150.

TRACKING MODE

Set the tracking mode among 1 to 4.

START TIME TGT VECT

Choose time which a vector appears after acquisition, TIME or SCAN and set seconds or scan counts.

OTHER menu setting

Open the OTHER menu by pressing [8] key on the INITIALIZE menu.

```
[OTHERS]
1  BACK
2  DEMO ECHO
   OFF/EG/SPU/PC
3  EAV/ w/o GYRO
   OFF/ON
4  ARP SELECT
   ARPA/ATA
5 INS
  OFF/SERIAL/LAN
```

EAV w/o GYRO

If a gyrocompass is not connected, choose the echo average function, ON (working) or OFF (no working).

ARP SELECT

Choose ARPA or ATA depending on your radar system.

INS

Choose appropriate item according to the ECDIS connected.

OFF: No connection
SERIAL: When connecting FEA-2105 series ECDIS.
LAN: When connecting FEA-2107 series ECDIS.

This page is intentionally left blank.

4. INSTALLING OPTIONAL EQUIPMENT

4.1 Gyro Converter GC-10

The Gyro Converter GC-10, incorporated inside the processor unit, converts analog gyrocompass reading into digital coded bearing data for display on the radar screen.

This section explains how to install the GC-10 (mainly consisting of the GYRO CONVERTER board) and set it up according to gyrocompass connected.

Installing the GYRO CONVERTER board

Necessary Parts: GC-10-2 (Code number 000-080-440)

See packing list for details at the back of this manual.

1. Open the processor unit.

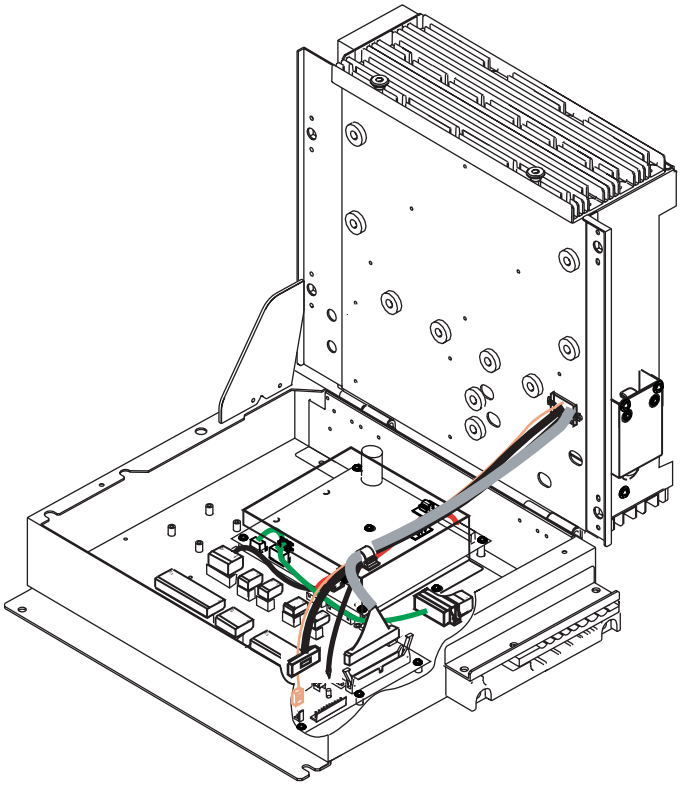

Processor unit (Opened)

2. Fasten the GYRO CONVERTER board in the processor unit with five washer head screws and male connector 231-607/019-FUR (called J602) with two screws.

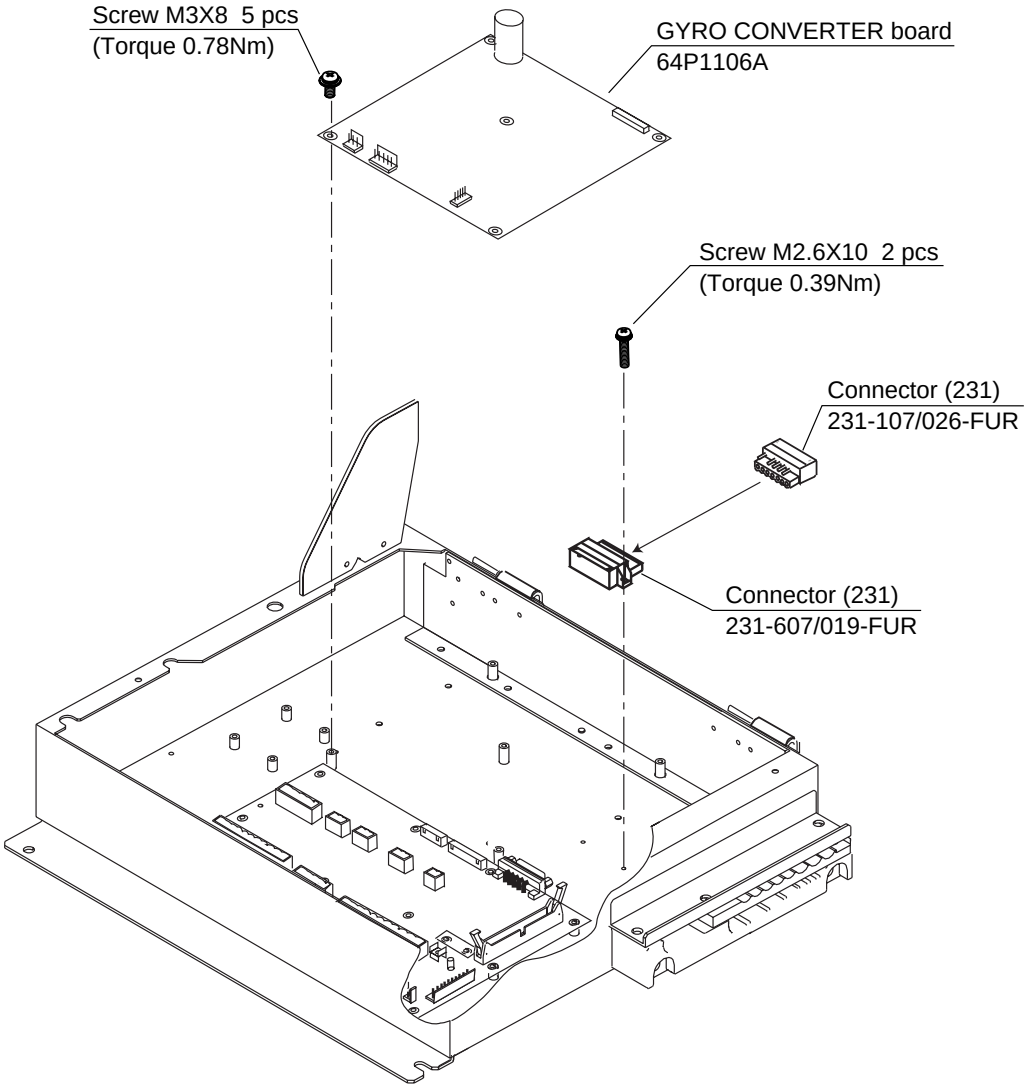

Attaching GYRO CONVERTER board in the processor unit

3. Connect the GYRO CONVERTER board and the 03P9342 board with connector assemblies 03-2088 and 03-2091.

4. Connect the GYRO CONVERTER board and J602 with two connector assemblies 03-2089 and 03-2090.

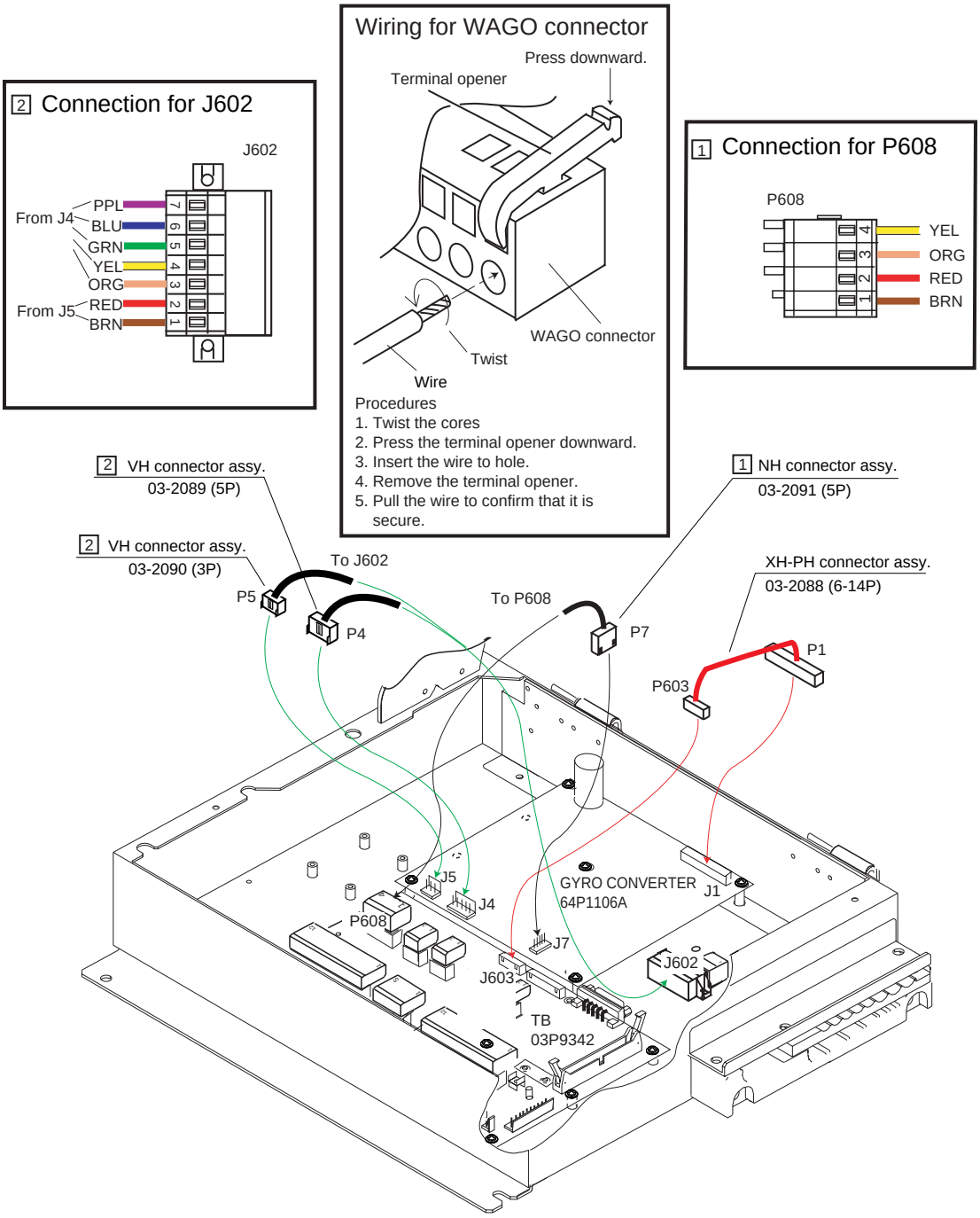

Connecting connector assemblies

5. Confirm gyrocompass specifications and set up the DIP switches and jumper wires on the GYRO CONVERTER board according to gyrocompass connected:
   - Setting jumper wires and DIP switches by gyrocompass specifications: page 4-5
   - Setting jumper wires and DIP switches by make and model of gyrocompass: page 4-7
   - Location of jumper wires and DIP switches: page 4-8
6. Pass gyrocompass cable through the cable clamp and connect it to connector J602 as shown in the figure on page 4-3.
7. Attach the clamps on the plastic cover and then attach the cover to the chassis as shown in the figure below. Insert cables to the clamp ED-1, respectively.

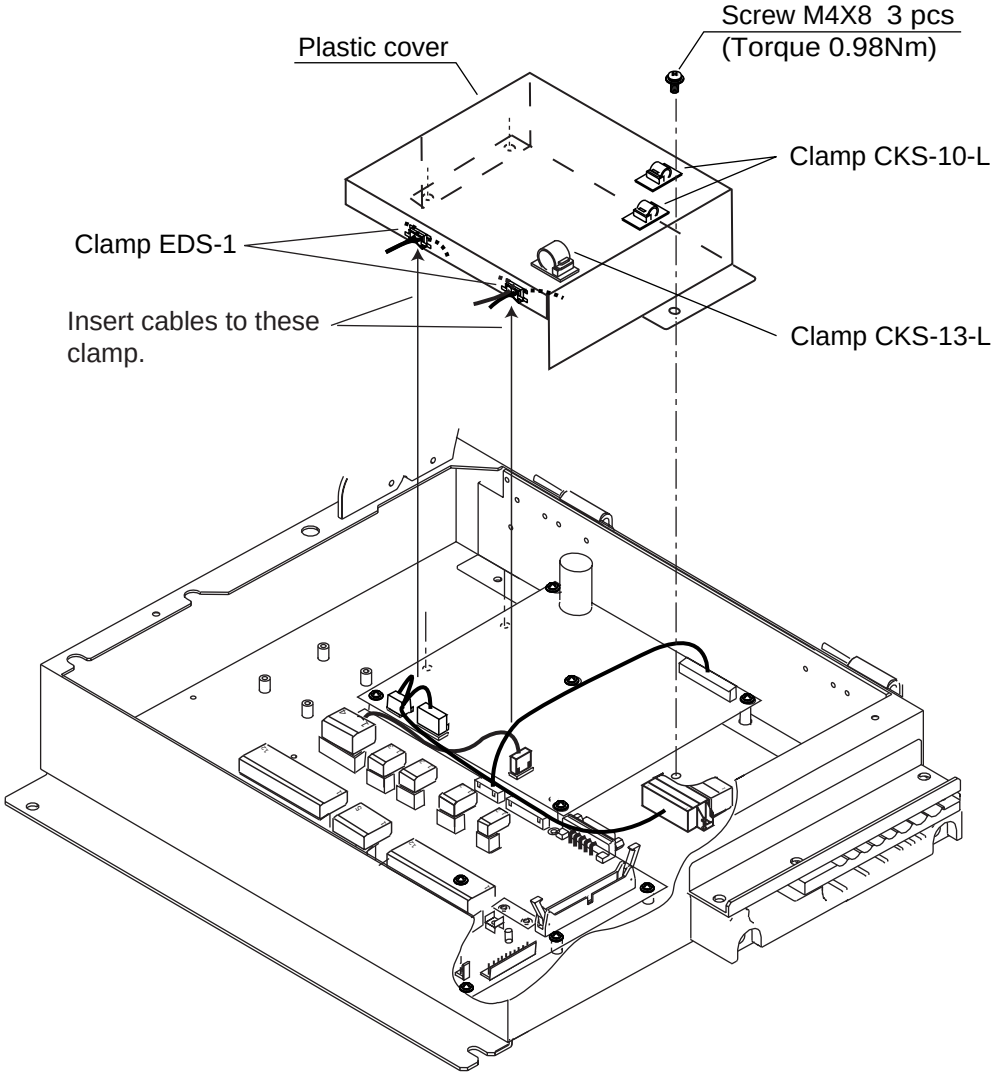

Attaching plastic cover for GYRO CONVERTER board

8. Close the processor unit.

Connection of external power supply

An external power supply is necessary when the repeater signal is step-by-step type and the step voltage is below 20 V or output voltage is less than 5 W.

1. Cut jumper wire JP1 on the GYRO CONVERTER board when an external power supply is used.
2. Connect gyro cable and power cable as shown below.

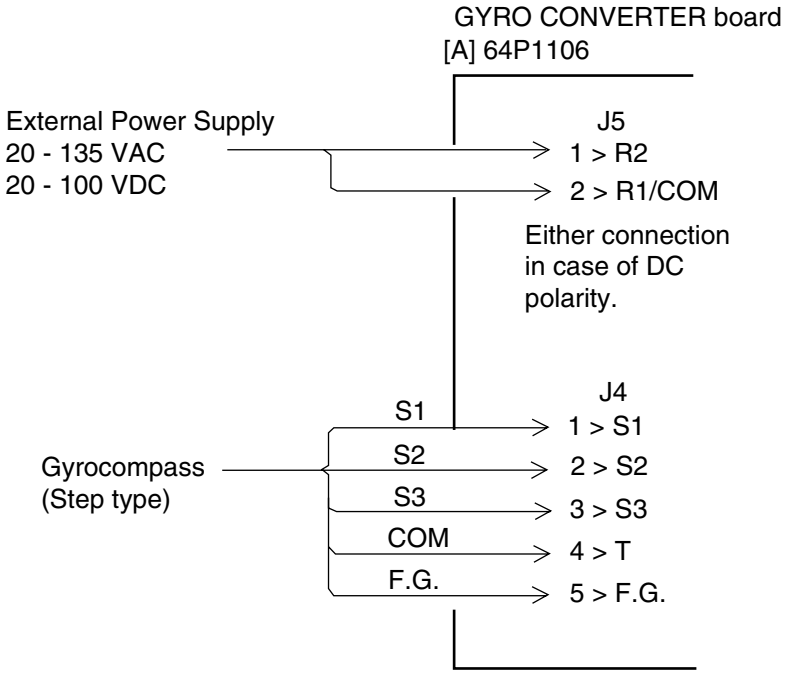

Connection of external power supply to GYRO CONVERTER board

DIP switch, jumper wire settings

Default setting

The default setting of all DIP switches is off and all jumper wires are set to “#1.” (Note that jumper wire JP1 is set at #1, #2, and #3.) In those settings the gyrocompass having the following characteristics can be directly connected; modification of the GYRO CONVERTER board is not necessary.

AC synchronous signal: 50/60 Hz
Rotor voltage: 60 V to 135 V AC
Stator voltage: 60 V to 135 V AC
Gear ratio: 360x
Supply voltage: 30 V to 135 V AC

If the specifications of the gyrocompass differ from those mentioned above, change jumper wire and DIP switch settings on the GYRO CONVERTER board. Settings may be changed according to gyrocompass specifications (see page 4-6) or make and model of gyrocompass (see page 4-7). For the location of DIP switches and jumper wires, see page 4-8.

Note: If you change the setting with power supplied, set #8 of SW2 from OFF to ON, then OFF again.

Setting method 1: DIP switch settings and gyrocompass specifications

1) Gyrocompass type

Gyrocompass type	SW 1-4	SW 1-5	SW 1-6	JP1
AC synchronous	OFF	OFF	OFF	#1, #2, #3
DC synchronous	OFF	OFF	OFF	#2, #3, #4
DC step	ON	OFF	OFF	#4, #5, #6
Full-wave pulsating current	OFF	ON	OFF	#4, #5, #6
Half-wave pulsating current	ON	ON	OFF	#4, #5, #6

2) Frequency

Frequency	SW 1-7	SW 1-8	Remarks
50/60 Hz	OFF	OFF	AC synchronous pulsating current
400 Hz	ON	OFF	AC synchronous pulsating current
500 Hz	OFF	ON	AC synchronous pulsating current
DC	ON	ON	DC synchronous DC step

3) Rotor Voltage (between R1 & R2)

Rotor Voltage	SW 2-1	JP3
20 to 45 VAC	ON	#2
30 to 70 VAC	OFF	#2
40 to 90 VAC	ON	#1
60 to 135 VAC	OFF	#1

4) Stator Voltage (between S1 & S2)

Stator Voltage	SW 2-2	SW 2-3	JP2
20 to 45 VAC, or 20 to 60 VDC	ON	OFF	#2
30 to 70 VAC, or 40 to 100 VDC	OFF	OFF	#2
40 to 90 VAC	ON	OFF	#1
60 to 135 VAC	OFF	OFF	#1

5) Ratio

Ratio	SW 1-1	SW 1-2	SW 1-3
360X	OFF	OFF	OFF
180X	ON	OFF	OFF
90X	OFF	ON	OFF
36X	ON	ON	OFF

6) Supply Voltage

Stator Voltage	JP4	JP5
20 to 45 VAC, or 20 to 60 VDC	#2	#2
30 to 70 VAC, or 40 to 100 VDC	#1	#1

7) AD-10 format data Tx interval

Select data transmitting interval for ports 1 to 6 with jumper wires JP6 and JP7.

Note: The Tx interval is available in 25 msec or 200 msec.

25 msec is for radar: 200 msec is for all other equipment.

8) NMEA-0183 Tx interval and Output sentence

Tx interval	SW 2-5	SW 2-6	Output sentence
1 s	OFF	OFF	HDT+VHW
200 ms	ON	OFF	HDT
100 ms	OFF	ON	HDT
25 ms	ON	ON	HDT

9) NMEA-0183 Version no.

Version no.	SW3-1
1.5	OFF
2.0	ON

10) NMEA-0183 Baud rate

Baud rate	SW3-2
4860bps	OFF
38400bps	ON

11) NMEA-0183 Talker

Talker	SW3-3
AG	OFF
HE	ON

12) Stator signal breaking detection

Detection	SW2-7
Execute	OFF
No execute	ON

SW2-4: factory use only
SW3-4: not used

Setting method 2: by make and model of gyrocompass

Maker	Models	Specification	SW 1-1	SW 1-2	SW 1-3	SW 1-4	SW 1-5	SW 1-6	SW 1-7	SW 1-8	SW 2-1	SW 2-2	SW 2-3	JP1	JP2	JP3	JP4	JP5
Anschutz	Standard 2,3	AC synchronous 50/60Hz Rotor voltage: 50/60V Stator voltage: 22V 360x	OFF	OFF	OFF	OFF	OFF	OFF	OFF	OFF	OFF	ON	OFF	#1, #2,#3	#2	#2	#1	#
	Standard 4,6	AC synchronous 50/60Hz Rotor voltage: 50/60V Stator voltage: 90V 360x	OFF	OFF	OFF	OFF	OFF	OFF	OFF	OFF	OFF	OFF	OFF	#1, #2,#3	#2	#1	#1	#
	Standard 20	DC step 35V 180x COM(-) ,3-wire(+)	ON	OFF	OFF	ON	OFF	OFF	ON	ON	-	ON	OFF	#4, #5,#6	#2	-	#2	#
Yokogawa Navtec (Plaith type)	C-1/1A/2/3 A-55, B-55	AC synchronous 50/60Hz Rotor voltage: 50/60V Stator voltage: 22V 360x	OFF	OFF	OFF	OFF	OFF	OFF	OFF	OFF	OFF	ON	OFF	#1, #2,#3	#2	#2	#1	#
	CMZ-700	DC step 24V 180x COM(+), 3-wire(-)	ON	OFF	OFF	ON	OFF	OFF	ON	ON	-	ON	OFF	Remo-ve	#2	-	*	*
	CMZ-250X/ 300X/500	DC synchronous 360x	OFF	OFF	OFF	OFF	OFF	OFF	ON	ON	-	ON	OFF	Remo-ve	#2	-	*	*
		DC step 35V 180x COM(+),3-wire(-)	ON	OFF	OFF	ON	OFF	OFF	ON	ON	-	ON	OFF	#4, #5,#6	#2	-	#2	#2
	CMZ-100/200/ 300 C-1Jr,D-1Z/1/3 IPS-2/3	AC synchronous 50/60Hz Rotor voltage: 100V Stator voltage: 90V 360x	OFF	OFF	OFF	OFF	OFF	OFF	OFF	OFF	OFF	OFF	OFF	#1, #2,#3	#1	#1	#1	#1
	CMZ-50 See note below.	step 35V 180x COM(+),3-wire(-)	ON	OFF	OFF	ON	OFF	OFF	ON	ON	-	ON	OFF	Remo-ve	#2	-	*	*
Plaith	NAVGAT II/III	AC synchronous 50/60Hz Rotor voltage: 50/60V Stator voltage: 68V 360x	OFF	OFF	OFF	OFF	OFF	OFF	OFF	OFF	OFF	OFF	OFF	#1, #2,#3	#2	#2	#1	#1
Tokimec (Sperry type)	ES-1/2/11 GLT-101/102/ 103/106K/107	AC synchronous 50/60Hz Rotor voltage: 100/110V Stator voltage: 90V 36x	ON	ON	OFF	OFF	OFF	OFF	OFF	OFF	OFF	OFF	OFF	#1, #2,#3	#1	#1	#1	#1
	ES-11A/110 TG-200 PR222R/2000 PR237L/H GM 21	AC synchronous 50/60Hz Rotor voltage: 100/110V Stator voltage: 22V 90x	OFF	ON	OFF	OFF	OFF	OFF	OFF	OFF	OFF	OFF	OFF	#1, #2,#3	#1	#1	#1	#1
	MK-14 MOD-1/2/T NK-EN,NK-EI	DC step 70V 180x COM(-), 3-wire(+)	ON	OFF	OFF	ON	OFF	OFF	ON	ON	-	OFF	OFF	#4, #5,#6	#2	-	#1	#1
	SR-130/140	DC step 70V 180x 5-wire, open collector	ON	OFF	OFF	OFF	ON	OFF	OFF	OFF	-	OFF	OFF	#4, #5,#6	#2	-	#1	#1
	TG-100/5000 PR-357/130/ 140, ES-17 GLT-201/202 /203	DC step 70V 180x COM(+), 3-wire(-)	ON	OFF	OFF	ON	OFF	OFF	ON	ON	-	OFF	OFF	#4, #5,#6	#2	-	#1	#1
	TG-6000	DC step 24V 180x	ON	OFF	OFF	ON	OFF	OFF	ON	ON	-	ON	OFF	#4, #5,#6	#2	-	#2	#2
	GM-11	AC synchronous 50/60Hz Rotor voltage: 100V Stator voltage: 90V 90x	OFF	ON	OFF	OFF	OFF	OFF	OFF	OFF	OFF	OFF	OFF	#1, #2,#3	#1	#1	#1	#1
	SR-120,ES-16 MK-10/20/30	DC step 35V 180x	ON	OFF	OFF	ON	OFF	OFF	ON	ON	-	ON	OFF	#4, #5,#6	#2	-	#2	#2
Kawasaki	GX-81	AC synchronous 50/60Hz Rotor voltage: 100/110V Stator voltage: 90V 90x	OFF	ON	OFF	OFF	OFF	OFF	OFF	OFF	OFF	OFF	OFF	#1, #2,#3	#1	#1	#1	#1
Armabrown	MK-10,MKL-1 SERIES1351, MOD-4	DC step 50V 180x COM(+), 3-wire(-)	ON	OFF	OFF	ON	OFF	OFF	ON	ON	-	OFF	OFF	#4, #5,#6	#2	-	#1	#1
Robertson	SKR-80	DC step 35V 180x COM(-), 3-wire(+)	ON	OFF	OFF	ON	OFF	OFF	ON	ON	-	ON	OFF	#4, #5,#6	#2	-	#2	#2

*: Set JP4 and JP5 according to the voltage of the external power supply.

Note: If CMZ-50 has 35VDC, set JP1 to #4, #5, #6.

Location of DIP switches, jumper wires on the GYRO CONVERTER board

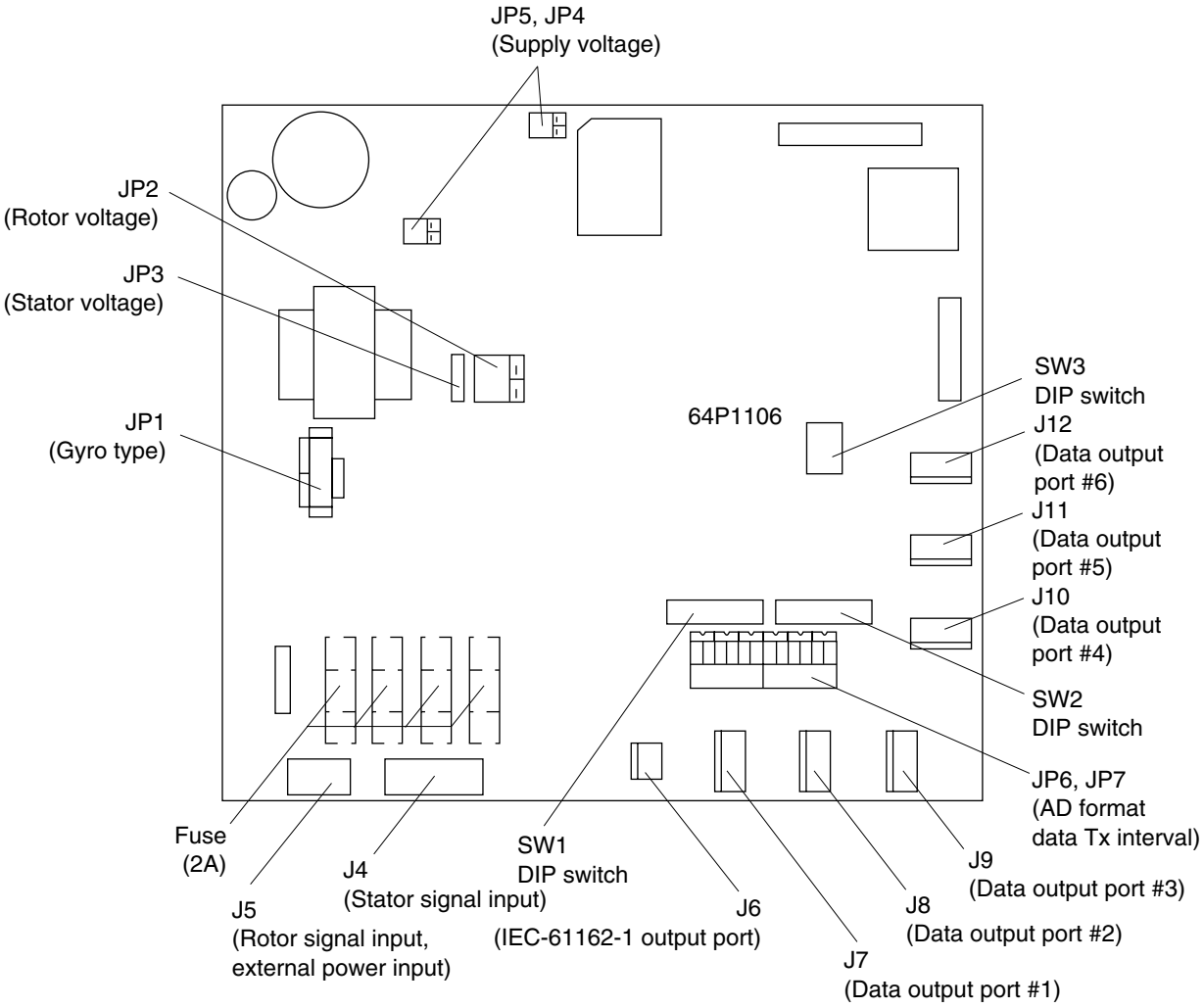

GYRO CONVERTER board

Setting the heading readout on the radar display

Confirm that the gyrocompass is giving a reliable readout. Then, set the heading readout on the radar display with the gyrocompass readout as follows:

1. Roll the trackball to place the arrow in the HDG box at the top right corner of the screen.
2. Push the right button on the trackball module to open the HDG menu.

```
[HDG MENU]

1 HDG SOURCE
  AD-10/SERIAL
2 GC-10 SETTING
  000.0
```

HDG menu

3. Press the [1] key to choose the HDG SOURCE and choose AD-10.
4. Press the [2] key to choose the GC-10 SETTING option.
5. Roll the wheel to set gyrocompass reading.
6. Press the [MENU] key to close the menu.

4.2 Memory Card Interface Unit

Mounting considerations

When selecting a mounting location, keep in mind the following points:

- Locate the memory card interface unit away from heat sources because of heat that can build up inside the cabinet.
- Locate the unit away from places subject to water splash and rain.
- Leave sufficient space at the sides and rear of the unit to facilitate maintenance.
- A magnetic compass will be affected if the unit is placed too close to the magnetic compass. Observe the compass safe distances on page ii to prevent deviation of a magnetic compass.

Flush mounting

This unit can be flush-mounted in a panel with the standard installation materials.

1. Prepare a cutout in the mounting location, referring to the outline drawing at the end of this manual.
2. Screw in the threaded rods to the flange of the front panel of the unit securely by hands.
3. Set the unit to the cutout.
4. Insert the flat washer, spring washer and nut in that order for each rod and fasten the nuts.

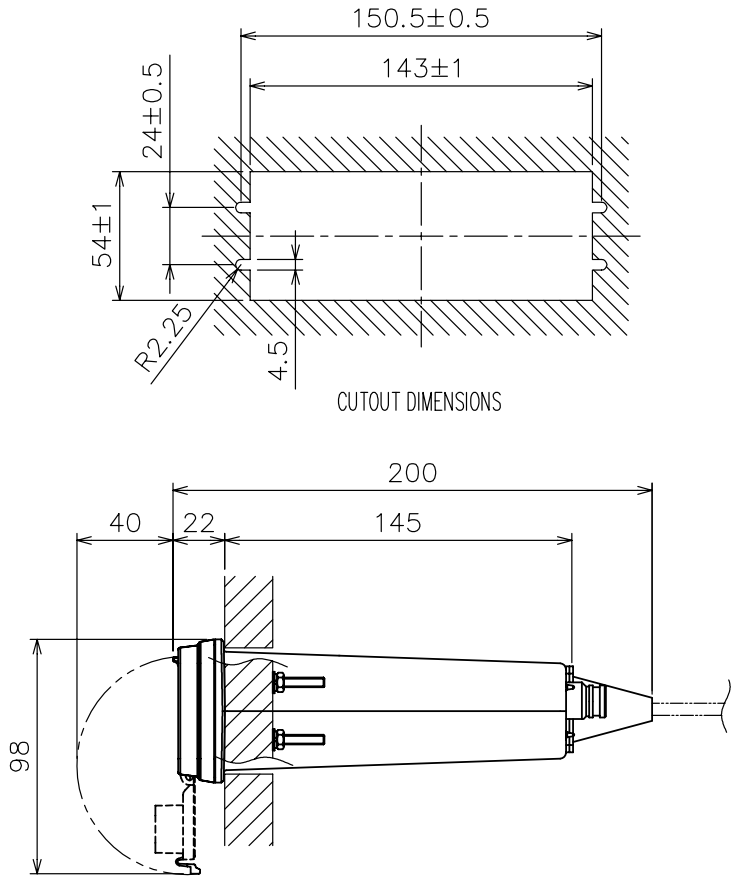

Flush mounting

Desktop mount

For desktop mount, the optional desktop mount kit FP03-10201 is required. Refer to the end of this manual.
1. Fix the mounting bracket 19-023-3081 on the unit with four screws.
2. Mount the above assembly on a desktop with four tapping screws.

Console mount

For console mount, the optional console mount kit FP03-10202 is required. Refer to the end of this manual.
1. Fix the mounting bracket 19-023-3091 on the unit with four screws.
2. Mount the above assembly to the console with four sets of nut, spring washer and flat washer.

Connection

1) Connection between one processor unit and one memory card IF unit

Connect as shown in the figure below.

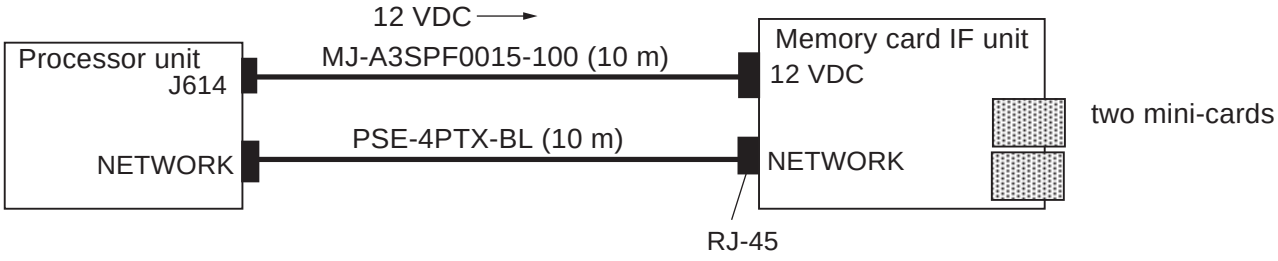

2) Connection between one memory card IF unit and multiple processor units

Prepare optional LAN cable kit and switching hub HUB-100. Connect as shown in the next page.

LAN cable kit

Type	Code No.	Contents
OP03-28900	000-082-658	Cable FR-FTPC-CY (10 m), Modular connector 2 pcs.
OP03-28910	000-082-689	Cable FR-FTPC-CY (20 m), Modular connector 2 pcs.
OP03-28920	000-082-660	Cable FR-FTPC-CY (30 m), Modular connector 2 pcs.

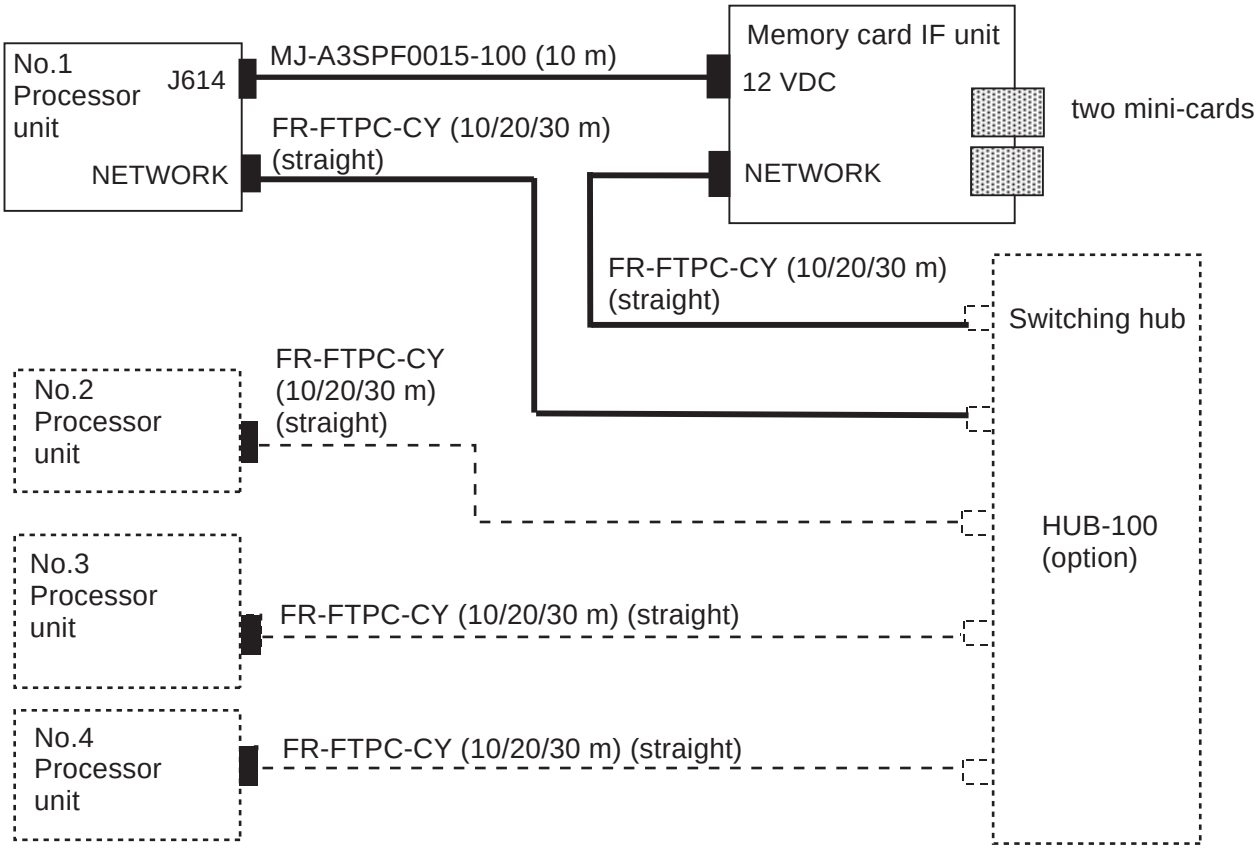

Note: When two memory card interface units are connected via network, change ID code for the second unit.

1. Remove the cover and set IP0 bit of the DIP switch S1 to ON on the CARDCPU board 03P9333.
2. Set INIT bit of S1 to ON and turn on the power of the radar. Wait till CR2 starts blinking. Never turn off the power until CR2 starts blinking.
3. Turn off the power and set INIT bit to OFF.

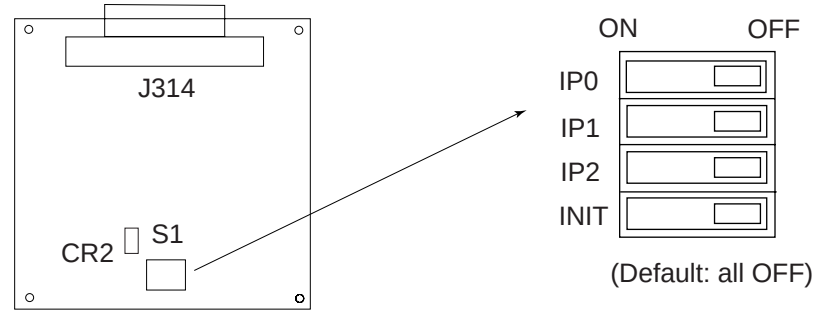

CARDCPU board 03P9333

4.3 DVI-RGB Conversion Kit

This information provides the procedure necessary for the installation of the DVI-RGB conversion kit. This kit is installed in the processor unit to enable connection of an RGB monitor or VDR (Voyage Data Recorder).

Name: DVI-RGB conversion kit
Type: OP03-180
Code no.: 008-536-070

See packing list for contents. Refer to the figure below for modification.

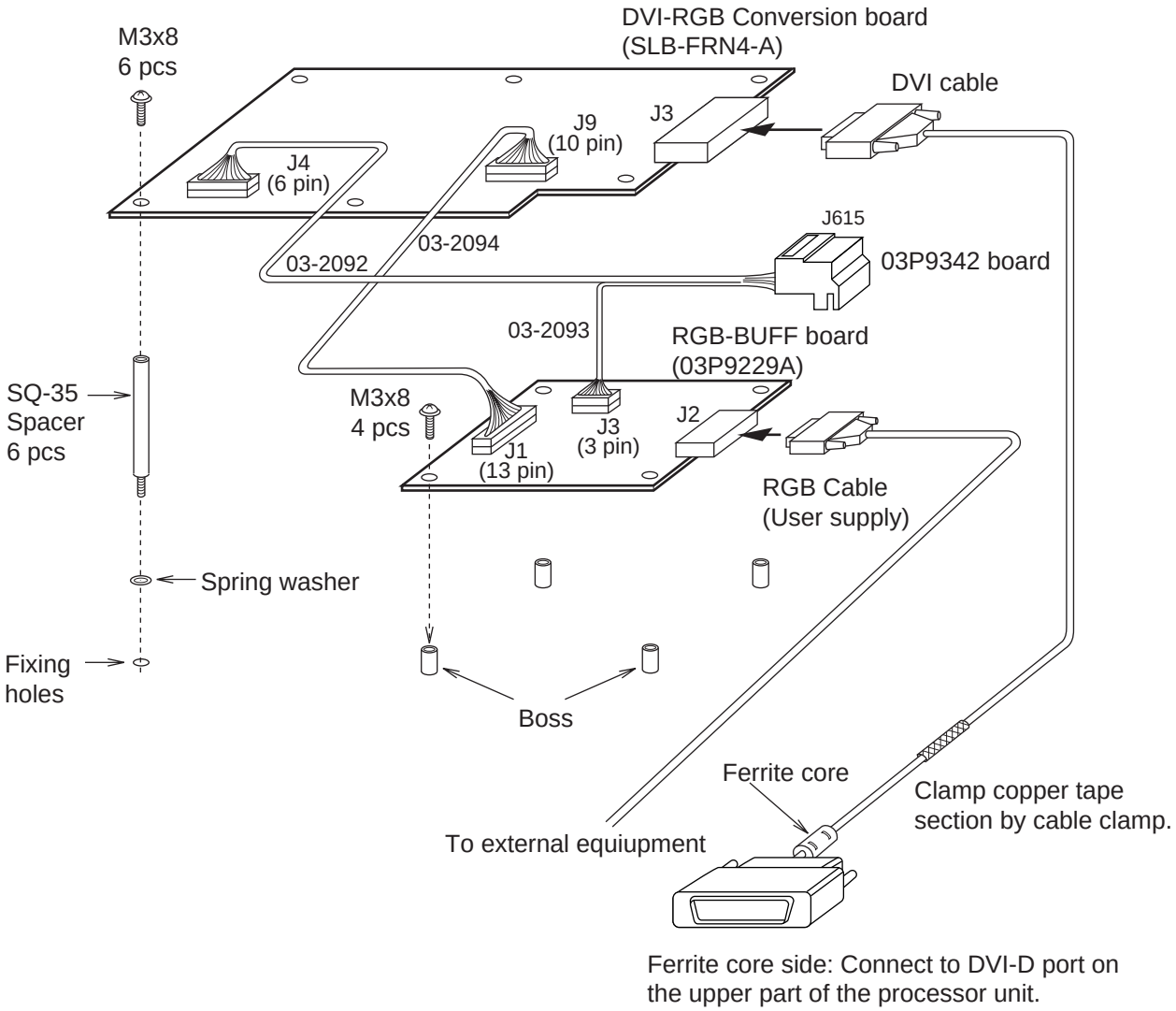

1. Remove the top cover and open the upper part of the processor unit.

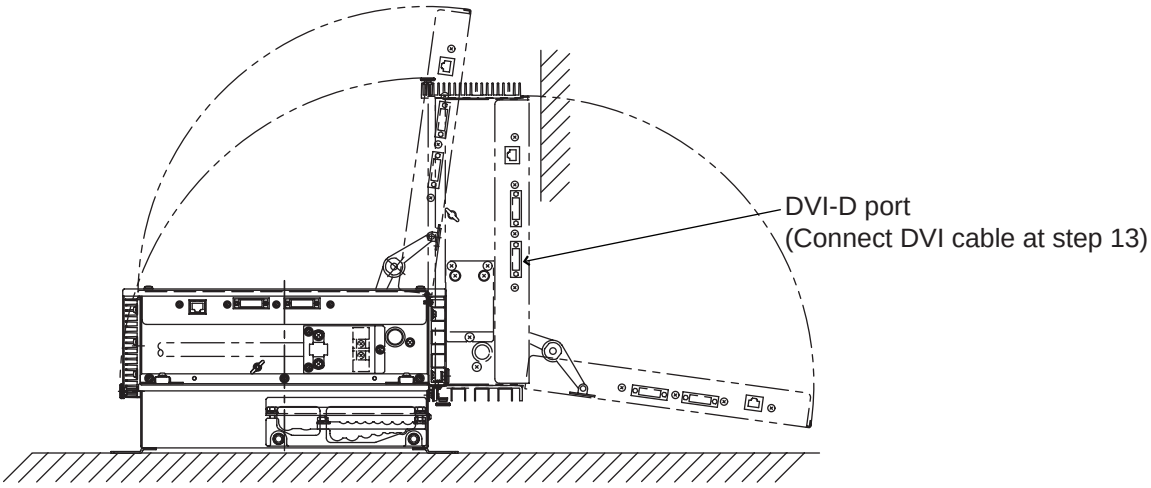

Processor unit

2. Fix the 03P9229A board (RGB-BUFF) with four screws. (See the figure below.)
3. Attach the connector assemblies to J1 and J3 on the 03P9229A board as follows.
   J1：13-pin connector of the connector assembly 03-2094
   J3：3-pin connector of the connector assembly 03-2093
4. Attach six sets of spring washers and spacers to the positions shown below.

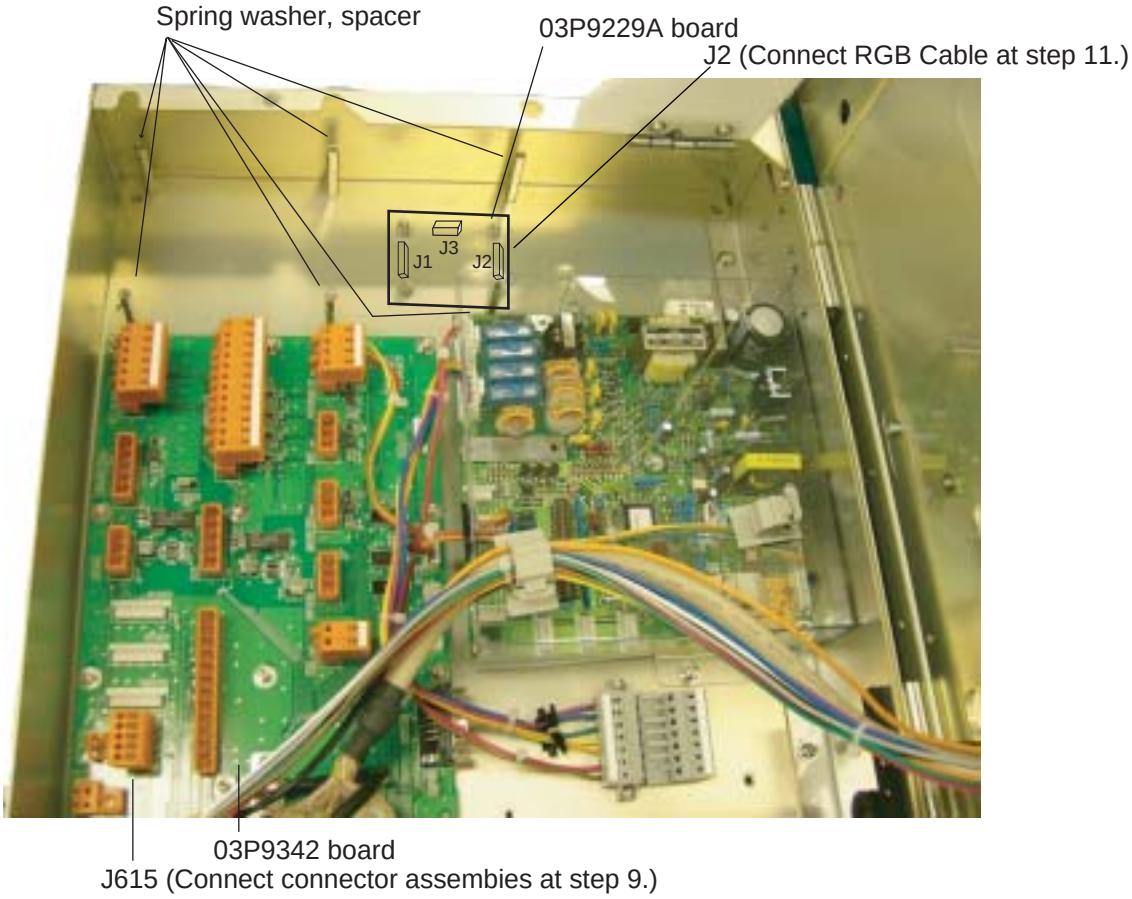

Processor unit (Lower part)

5. Attach the DVI-RGB conversion board to the location shown in the figure on the next page.

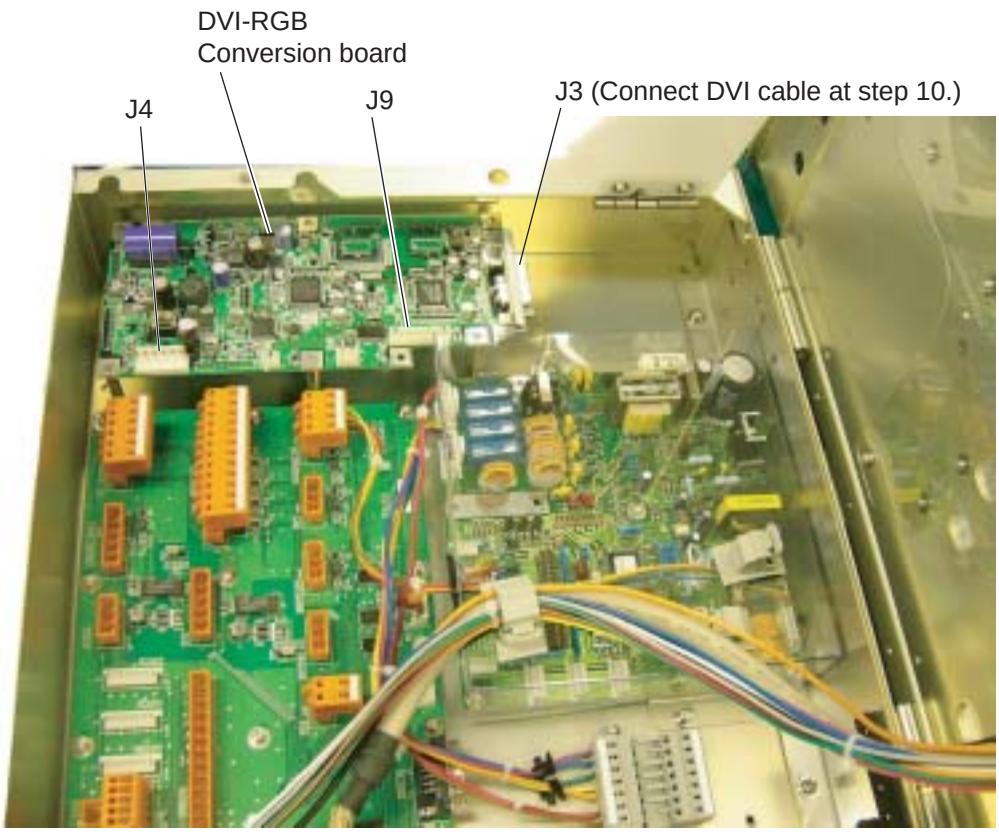

Fixing the DVI-RGB conversion board

6. Attach the 10-pin connector from J1 on the 03P9229A board to J9 on the DVI-RGB board.
7. Attach the connector assembly 03-2092 to J4 on the DVI-RGB conversion board.
8. Remove connector housing J615 from the 03P9342 board. Connect the cable from J3 on the 03P9229A board and the cable from J4 on the DVI-RGB conversion board to J615. After connection, attach J615 to the 03P9342 board.

   To connect wires to the connector housing, use the terminal opener (supplied as installation materials) as shown below.

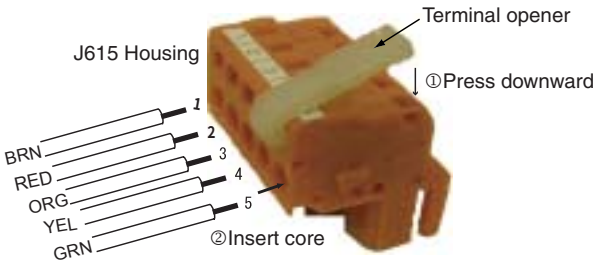

Connecting wires to the housing

9. Connect the DVI cable to J3 on the DVI-RGB conversion board. Connect the end which does not have the ferrite core.
10. Pass an RGB cable (local supply) through the cable clamp and connect it to J2 on the 03P9229A board.
11. Pass the DVI cable through the cable clamp, laying the section with copper tape in the cable clamp.
12. Assemble the processor unit and connect the other end of the DVI cable to DVI-D port.

4.4 BNC Connector Converter

To connect the VR-5000 (FURUNO Voyage Data Recorder) to this radar, the DVI-RGB conversion kit (mentioned at previous paragraph) and the BNC connector converter are required. Also VGA cable (between the processor unit and the BNC connector converter) and five 75 ohms coaxial cables (between the BNC connector converter and VR-5000) are required.

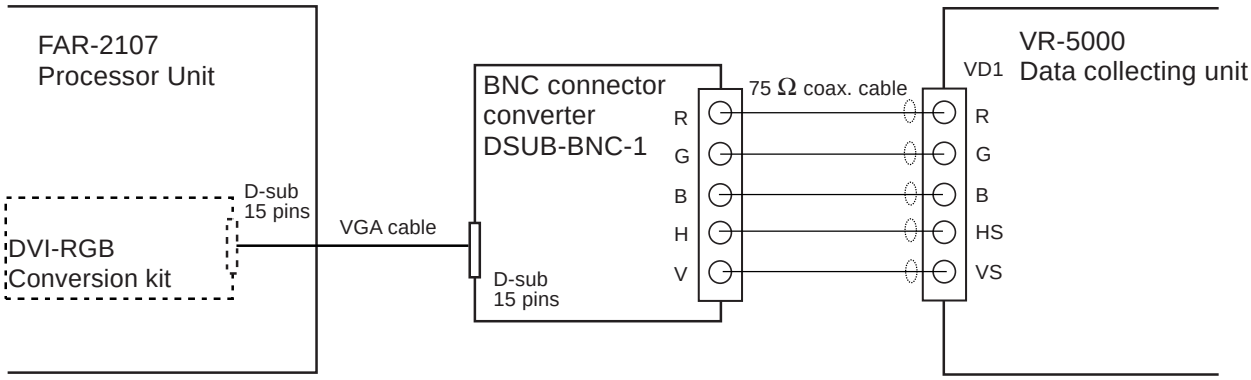

Interconnection

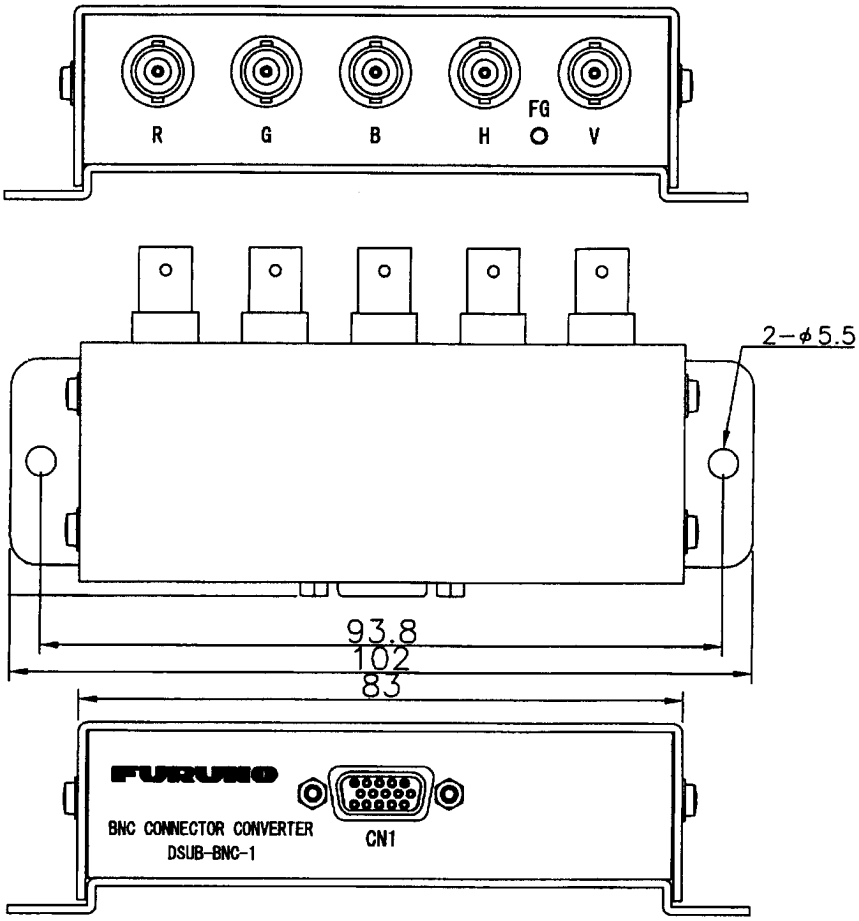

4.5 Switching Hub

If two or more processor units and memory card IF units are installed, the Switching Hub HUB-100 is required.

Interconnection

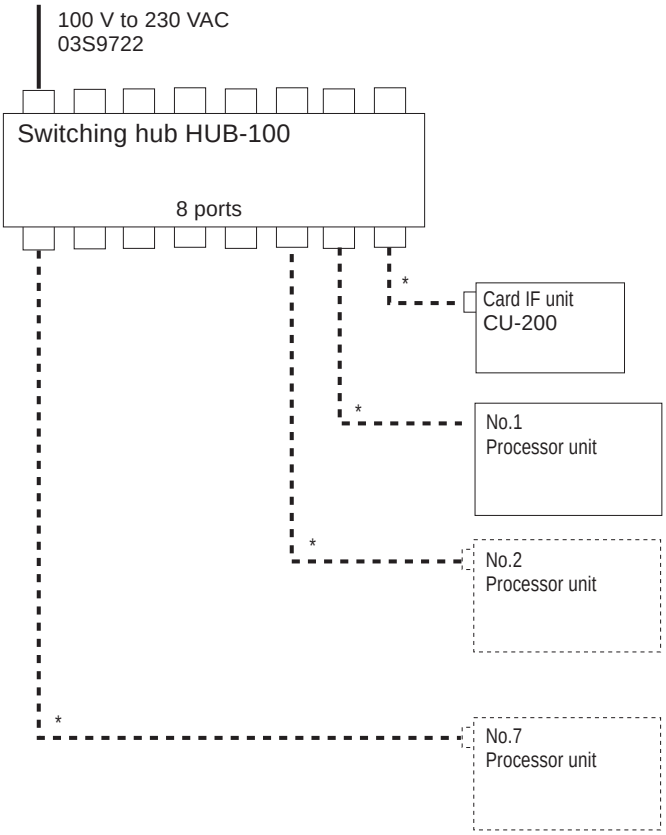

*: Optional cable(FR-FTPC-CY*10M/20M/30M+moduler connector)or CAT5 cable (user supply)

Mounting

Fix the unit with four self-tapping screws (4x16).

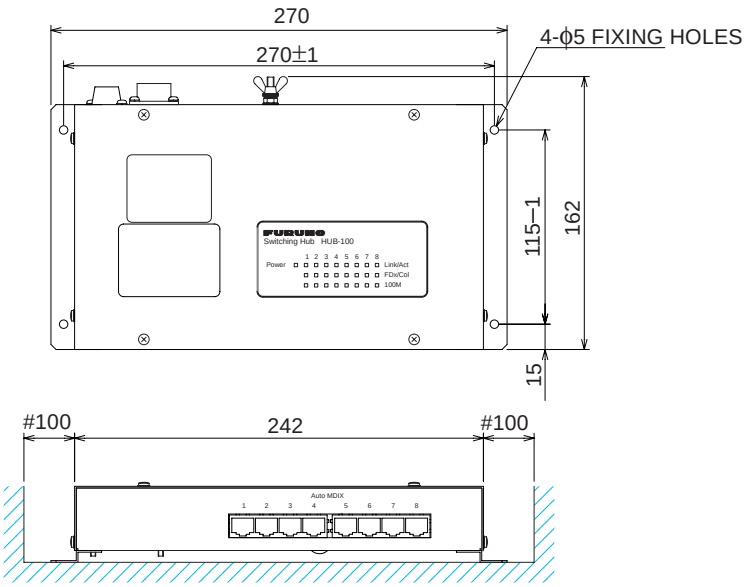

5. INPUT/OUTPUT DATA

Input and output data are shown in the table below.

Note: This radar accepts position data fixed by WGS-84 geodetic datum. Set the datum to WGS-84 on the EPFS (GPS, etc.) connected to this radar. If other type of datum is input, the error message "DATUM" appears and the AIS feature is inoperative.

Input

Data	Specifications	Contents	Remarks
Heading signal	synchro or step	GC-10 required	AD-10 and IEC 61162 are switched by menu setting.
	AD-10 format	External AD-100	
	IEC 61162-2		
Speed signal	IEC 61162-1		
Navaid data	IEC 61162-1	Position, course, speed, LORAN-C TD, waypoint, route, time, wind data, current data, depth, temperature, roll, pitch, ROT	
External radar signal	Heading, Bearing, Trigger, Video	No STC control	Operate as remote display
Alarm ACK input	Contact closure		Input from alarm system
Track Control unit	RS-422		Option

Output

Radar system data	RS-232C	RSD, OSD, TLL, AAM	For PC plotter
ARPA data	IEC 61162-1	TTM	For ECDIS
Remote display signal	HD, BP Trigger, Video		2 ports
External LCD monitor signal	DVI	Same as main display unit	2 systems in total
External CRT monitor signal	R, G, B, H, V	Same as main display unit	Option
Alarm signal	Contact closure	Output to alarm system by using photo-relay	4 systems, Output contents are selected by menu.

IEC 61162 input sentence and priority

Contents	Sentence and priority
Speed (STW)	VBW>VHW
Speed (SOG)	VBW
Speed (position)	VTG>RMC
Heading (True)	HDT*
Position	GGA>GLL>RMC>RMA
Waypoint	BWR>BWC>RMB
Date	ZDA
Depth	DPT>DBT>DBS
Temperature	MTW
Wind	MWV

*: HDT is IEC61162-2.
OTHERS IEC6112-1 ed2.

IEC 61162 output sentence

Contents	Sentence
Target L/L	TLL (Not on IMO radar)
Radar system data	RSD
Own ship data	OSD
ARPA target data	TTM

*: Not on IMO radar

PACKING LIST

RSB-098-080/RSB-099-080/RSB-100-080/RSB-101-080/RSB-102-080

NAME	OUTLINE	DESCRIPTION/CODE №	Q'TY
ユニット UNIT			
空中線本体部 ANTENNA CHASSIS	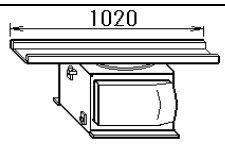	RSB-098-080-* 008-538-770 **	1
付属品 ACCESSORIES			
付属品 ACCESSORIES		FP03-10101 008-538-730	1
工事材料 INSTALLATION MATERIALS			
工事材料 INSTALLATION MATERIALS		CP03-27201 008-538-720	1

1.ｺｰﾄﾞ番号末尾の[**]は、選択品の代表型式/ｺｰﾄﾞを表します。
CODE NUMBER ENDED BY "**" INDICATES THE NUMBER OF TYPICAL MATERIAL.

（略図の寸法は、参考値です。 DIMENSIONS IN DRAWING FOR REFERENCE ONLY.）

FURUNO

CODE NO.	008-538-720	03G0-X-9401 -1
TYPE	CP03-27201	1/2

工事材料表

INSTALLATION MATERIALS

番号 NO.	名称 NAME	略図 OUTLINE	型名／規格 DESCRIPTIONS		数量 Q'TY	用途／備考 REMARKS
1	ｼｰﾙﾜｯｼｬ SEAL WASHER	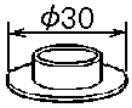	03-001-3002-0		8	
			CODE NO.	300-130-020		
2	防蝕ゴム CORROSION-PROOF RUBBER MAT	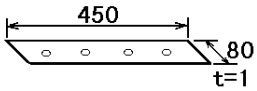	03-029-0301-2		2	
			CODE NO.	100-091-112		
3	操作ﾚﾊﾞｰ TERMINAL OPENER	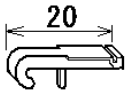	231-131		1	
			CODE NO.	000-808-981		
4	圧着端子 CRIMP-ON LUG	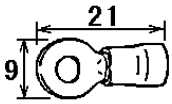	FV2-3		2	
			CODE NO.	000-108-424		
5	圧着端子 CRIMP-ON LUG	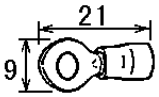	FV2-4 ｱｵ		3	
			CODE NO.	000-538-118		
6	圧着端子 CRIMP-ON LUG	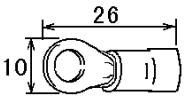	FV5.5-4		1	
			CODE NO.	000-538-123		
7	ﾊﾞﾈ座金 SPRING WASHER	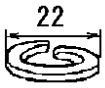	M12 SUS304		8	
			CODE NO.	000-864-263		
8	ﾐｶﾞｷ平座金 FLAT WASHER		M12 SUS304		8	
			CODE NO.	000-864-132		
9	六角ﾅｯﾄ　1種 HEX.NUT	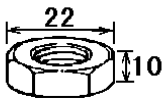	M12 SUS304		16	
			CODE NO.	000-863-112		
10	六角ﾎﾞﾙﾄ　(全ﾈｼﾞ) HEX.BOLT	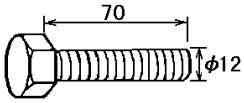	M12X70 SUS304		8	
			CODE NO.	000-807-825		

03G0-X-9401

FURUNO ELECTRIC CO.,LTD.

(略図の寸法は、参考値です。 DIMENSIONS IN DRAWING FOR REFERENCE ONLY.)

FURUNO

CODE NO.	008-538-720	03G0-X-9401 -1
TYPE	CP03-27201	2/2

工事材料表

INSTALLATION MATERIALS

番号 NO.	名称 NAME	略図 OUTLINE	型名／規格 DESCRIPTIONS		数量 Q'TY	用途／備考 REMARKS
11	ﾊﾞﾈ座金 SPRING WASHER		M6 SUS304		1	
			CODE NO.	000-864-260		
12	ﾐｶﾞｷ平座金 FLAT WASHER		M6 SUS304		3	
			CODE NO.	000-864-129		
13	六角ﾅｯﾄ　１種 HEX.NUT	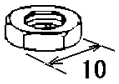	M6 SUS304		1	
			CODE NO.	000-863-109		
14	六角ﾎﾞﾙﾄ HEX.BOLT	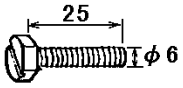	M6X25 SUS304		1	
			CODE NO.	000-862-180		
15	ｱｰｽ線 GROUNDING WIRE	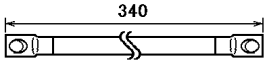	RW-4747-1 03S4747-2		1	
			CODE NO.	000-566-000		

03G0-X-9401

FURUNO ELECTRIC CO.,LTD.

（略図の寸法は、参考値です。　DIMENSIONS IN DRAWING FOR REFERENCE ONLY.）

FURUNO

CODE NO.	008-538-730	03G0-X-9501 -0
TYPE	FP03-10101	1/1

付属品表

ACCESSORIES

番号 NO.	名称 NAME	略図 OUTLINE	型名／規格 DESCRIPTIONS		数量 Q'TY	用途／備考 REMARKS
1	つり上げ金具 LIFTING FIXTURE	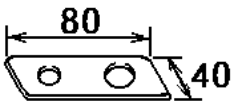	03-015-3233-0		2	
			CODE NO.	100-090-720		
2	取付用ｶﾗｰ COLLAR FOR LIFTING FIXTURE	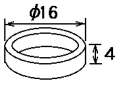	03-015-3234-0		2	
			CODE NO.	100-090-730		

03G0-X-9501

FURUNO ELECTRIC CO.,LTD.

（略図の寸法は、参考値です。 DIMENSIONS IN DRAWING FOR REFERENCE ONLY.）

PACKING LIST

SN30AF/SN36AF

NAME	OUTLINE	DESCRIPTION/CODE №	Q'TY
ユニット UNIT			
ｱﾝﾃﾅ組品 ANTENNA	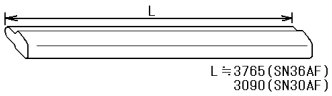	SN30AF 008-505-950 **	1
ｱﾝﾃﾅ工材 ANTENNA INSTALLATION MATERIALS			
工事材料 INSTALLATION MATERIALS		SN5AF/7AF/30AF/36AF 008-254-590	1

1.ｺｰﾄﾞ番号末尾の[**]は、選択品の代表型式/ｺｰﾄﾞを表します。
CODE NUMBER ENDED BY "**" INDICATES THE NUMBER OF TYPICAL MATERIAL.

（略図の寸法は、参考値です。 DIMENSIONS IN DRAWING FOR REFERENCE ONLY.）

FURUNO

CODE NO.	008-254-590	03CQ-X-9421 -0
TYPE		1/1

工事材料表

INSTALLATION MATERIALS

SN5AF/SN7AF/SN7AF-MSA
SN30AF/SN36AF

番号 NO.	名称 NAME	略図 OUTLINE	型名／規格 DESCRIPTIONS		数量 Q'TY	用途／備考 REMARKS
1	ﾋﾟﾝ GUIDE PIN	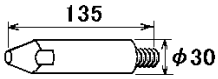	03-006-4081-0		2	
			CODE NO.	300-640-810		
2	ｽﾘｰﾎﾞﾝﾄﾞ SEALANT	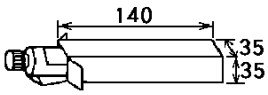	1211 50G		1	
			CODE NO.	000-854-118		
3	ｏﾘﾝｸﾞ O-RING	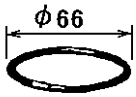	JISB2401-1A-G60		2	
			CODE NO.	000-851-309		
4	ﾐｶﾞｷ平座金 FLAT WASHER	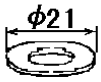	M10 SUS304		10	
			CODE NO.	000-864-131		
5	ﾊﾞﾈ座金 SPRING WASHER		M10 SUS304		10	
			CODE NO.	000-864-261		
6	六角ﾎﾞﾙﾄ HEX.BOLT	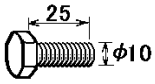	M10X25 SUS304		10	
			CODE NO.	000-868-778		

03CQ-X-9421

FURUNO ELECTRIC CO.,LTD.

（略図の寸法は、参考値です。 DIMENSIONS IN DRAWING FOR REFERENCE ONLY.）

PACKING LIST

PSU-007-*-*-*

NAME	OUTLINE	DESCRIPTION/CODE №	Q'TY
ユニット UNIT			
電源制御部 POWER CONTROL UNIT	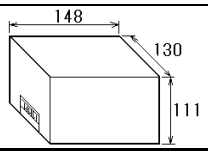	PSU-007-70-23-S 000-081-241 **	1
工事材料 INSTALLATION MATERIALS			
工事材料 INSTALLATION MATERIALS		CP03-27301 008-538-740	1

1.ｺｰﾄﾞ番号末尾の[**]は、選択品の代表型式/ｺｰﾄﾞを表します。
CODE NUMBER ENDED BY "**" INDICATES THE NUMBER OF TYPICAL MATERIAL.

（略図の寸法は、参考値です。 DIMENSIONS IN DRAWING FOR REFERENCE ONLY.）

FURUNO

CODE NO.	008-538-740	03G0-X-9402 -0
TYPE	CP03-27301	1/1

工事材料表

INSTALLATION MATERIALS

番号 NO.	名称 NAME	略図 OUTLINE	型名／規格 DESCRIPTIONS		数量 Q'TY	用途／備考 REMARKS
1	圧着端子 CRIMP-ON LUG	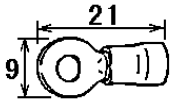	FV2-3		2	
			CODE NO.	000-108-424		
2	圧着端子 CRIMP-ON LUG	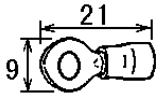	FV2-4 ｱｵ		6	
			CODE NO.	000-538-118		

03G0-X-9402

FURUNO ELECTRIC CO.,LTD.

（略図の寸法は、参考値です。 DIMENSIONS IN DRAWING FOR REFERENCE ONLY.）

FURUNO

CODE NO.		03GL-X-9401 -3
TYPE		1/1

工事材料表

INSTALLATION MATERIALS

FAR-2117 series

番号 NO.	名称 NAME	略図 OUTLINE	型名／規格 DESCRIPTIONS		数量 Q'TY	用途／備考 REMARKS
1	ｹｰﾌﾞﾙ(14C) CABLE	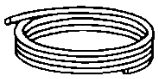 L=15M	RW-9600 *15M*		1	選択 TO BE SELECTED 信号ｹｰﾌﾞﾙ SIGNAL CABLE
			CODE NO.	000-147-370		
2	ｹｰﾌﾞﾙ(14C) CABLE	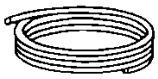 L=30M	RW-9600 *30M*		1	選択 TO BE SELECTED 信号ｹｰﾌﾞﾙ SIGNAL CABLE
			CODE NO.	000-149-193		
3	ｹｰﾌﾞﾙ(14C) CABLE	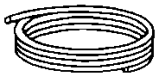 L=40M	RW-9600 *40M*		1	選択 TO BE SELECTED 信号ｹｰﾌﾞﾙ SIGNAL CABLE
			CODE NO.	000-150-490		
4	ｹｰﾌﾞﾙ(14C) CABLE	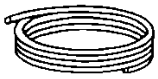 L=50M	RW-9600 *50M*		1	選択 TO BE SELECTED 信号ｹｰﾌﾞﾙ SIGNAL CABLE
			CODE NO.	000-147-373		

03GL-X-9401

FURUNO ELECTRIC CO.,LTD.

（略図の寸法は、参考値です。 DIMENSIONS IN DRAWING FOR REFERENCE ONLY.）

PACKING LIST

MU-201CR

NAME	OUTLINE	DESCRIPTION/CODE №	Q'TY
ユニット UNIT			
表示部 DISPLAY UNIT	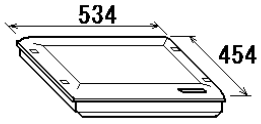	MU-201CR 000-080-288 **	1
予備品 SPARE PARTS			
予備品 SPARE PARTS		SP03-03900 000-081-063	1 DC用
予備品 SPARE PARTS			
予備品 SPARE PARTS		SP03-14401 008-535-990	1 AC用
付属品 ACCESSORIES			
付属品 ACCESSORIES	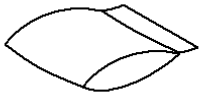	FP03-09810 008-536-010	1
その他工材 OTHER INSTALLATION MATERIALS			
ｹｰﾌﾞﾙ組品 CABLE ASSY.	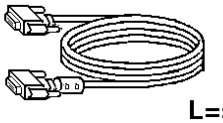	DVI-D/D SINGLELINK 5M 000-149-054	1

1.ｺｰﾄﾞ末尾に[**]の付いたﾕﾆｯﾄは代表の型式/ｺｰﾄﾞを表示しています。
DOUBLE ASTERISK DENOTES COMMONLY USED EQUIPMENT.

2.予備品は、AC用,DC用で選択願います。
CHOOSE SPARE PARTS DEPENDING ON AC OR DC POWER.

(略図の寸法は、参考値です。 DIMENSIONS IN DRAWING FOR REFERENCE ONLY.)

FURUNO

CODE NO.	008-536-010	03GL-X-9504 -1
TYPE	FP03-09810	1/1

付属品表

ACCESSORIES

For MU-201CR

番号 NO.	名称 NAME	略図 OUTLINE	型名／規格 DESCRIPTIONS		数量 Q'TY	用途／備考 REMARKS
1	ﾊﾟﾈﾙｶﾊﾞｰ COSMETIC CAP	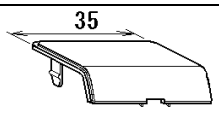	03-163-1101-1		4	表示部用 FOR DISPLAY UNIT
			CODE NO.	100-305-111		
2	ﾊﾟﾈﾙﾌｯｸ PANEL HOOK	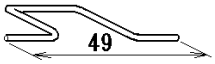	03-163-1102-0		2	表示部用 FOR DISPLAY UNIT
			CODE NO.	100-305-120		
3	+ﾄﾗｽﾀｯﾋﾟﾝﾈｼﾞ 1種 SELF-TAPPING SCREW	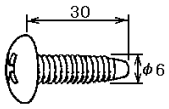	6X30 SUS304		4	表示部用 FOR DISPLAY UNIT
			CODE NO.	000-802-085		

03GL-X-9504

FURUNO ELECTRIC CO.,LTD.

（略図の寸法は、参考値です。 DIMENSIONS IN DRAWING FOR REFERENCE ONLY.）

PACKING LIST

MU-231CR

NAME	OUTLINE	DESCRIPTION/CODE №	Q'TY
ユニット UNIT			
表示部 DISPLAY UNIT	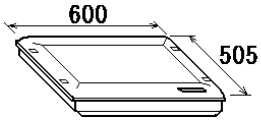	MU-231CR 000-080-426 **	1
予備品 SPARE PARTS			
予備品 SPARE PARTS		SP03-14401 008-535-990	1 AC用
予備品 SPARE PARTS			
予備品 SPARE PARTS		SP03-14402 008-536-000	1 DC用
付属品 ACCESSORIES			
付属品 ACCESSORIES	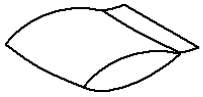	FP03-09810 008-536-010	1
工事材料 INSTALLATION MATERIALS			
ｹｰﾌﾞﾙ組品 CABLE ASSY.	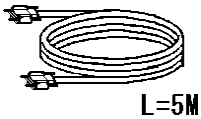	DVI-D/D SINGLELINK 5M 000-147-434	1

1.ｺｰﾄﾞ末尾に[**]の付いたﾕﾆｯﾄは代表の型式/ｺｰﾄﾞを表示しています。
DOUBLE ASTERISK DENOTES COMMONLY USED EQUIPMENT.

2.予備品は、AC,DCで選択願います。
CHOOSE SPARE PARTS DEPENDING ON AC OR DC POWER.

（略図の寸法は、参考値です。 DIMENSIONS IN DRAWING FOR REFERENCE ONLY.）

PACKING LIST

RPU-013

NAME	OUTLINE	DESCRIPTION/CODE №	Q'TY
ユニット UNIT			
制御部 PROCESSOR UNIT	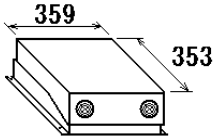	RPU-013 000-080-3**	1
予備品 SPARE PARTS			
予備品 SPARE PARTS		SP03-14404 008-535-910	1 (*1)
工事材料 INSTALLATION MATERIALS			
工事材料 INSTALLATION MATERIALS		CP03-25602 008-535-940	1 (*2)
図書 DOCUMENT			
装備要領書 INSTALLATION MANUAL	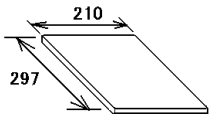	IMJ-35190-* 000-147-453**	1
取扱説明書 OPERATOR'S MANUAL	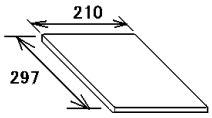	OMJ-35190-* 000-147-451**	1

1.ｺｰﾄﾞ末尾に[**]の付いたﾕﾆｯﾄは代表の型式/ｺｰﾄﾞを表示しています。
DOUBLE ASTERISK DENOTES COMMONLY USED EQUIPMENT.

2.予備品は、(*1)のSP03-14404(AC100用)の他にSP03-14405(AC220用),SP03-14406(DC100用)から選択して下さい。
CHOOSE SPARE PARTS FROM AMONG SP03-14404 *1 (FOR 100VAC SPEC.), SP03-14405(FOR 220VAC SPEC.) AND SP03-14406(FOR 24VDC SPEC).

3.工事材料は、(*2)のCP03-25602(AC用)の他に、CP03-25603(DC用)から選択してください。
CHOOSE INSTALLATION MATERIALS FROM CP03-25602 *2(FOR AC SPEC.) AND CP03-25603(FOR DC SPEC.) APPROPRIATELY.

(略図の寸法は、参考値です。 DIMENSIONS IN DRAWING FOR REFERENCE ONLY.)

FURUNO

CODE NO.	008-535-940	03GL-X-9405 -0
TYPE	CP03-25602	1/1

工事材料表

INSTALLATION MATERIALS

For RPU-013 AC set

番号 NO.	名称 NAME	略図 OUTLINE	型名／規格 DESCRIPTIONS		数量 Q'TY	用途／備考 REMARKS
1	操作ﾚﾊﾞｰ TERMINAL OPENER	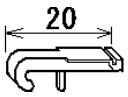	231-131		1	制御部用 FOR PROCESSOR UNIT
			CODE NO.	000-808-981		
2	操作ﾚﾊﾞｰ TERMINAL OPENER	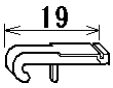	734-230		1	制御部用 FOR PROCESSOR UNIT
			CODE NO.	000-147-417		
3	圧着端子 CRIMP-ON LUG	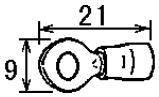	FV2-4 ｱｵ		2	制御部用 FOR PROCESSOR UNIT
			CODE NO.	000-538-118		

03GL-X-9405

（略図の寸法は、参考値です。 DIMENSIONS IN DRAWING FOR REFERENCE ONLY.）

FURUNO

CODE NO.	008-535-610	03GL-X-9505 -2
TYPE	FP03-09850	1/1

付属品表

ACCESSORIES

For RCU-014 Desktop mount kit

番号 NO.	名称 NAME	略図 OUTLINE	型名／規格 DESCRIPTIONS		数量 Q'TY	用途／備考 REMARKS
1	KB直付金具 KB FIXING METAL	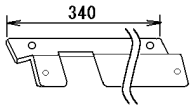	03-163-7521-1		1	操作部用 FOR CONTROL UNIT
			CODE NO.	100-306-251		
2	ｸﾞﾛﾒｯﾄ CAP	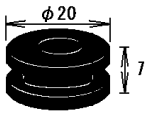	G-39		1	操作部用 FOR CONTROL UNIT
			CODE NO.	000-147-167		
3	+-ﾅﾍﾞｾﾑｽﾈｼﾞB WASHER HEAD SCREW	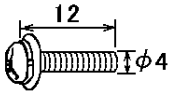	M4X12 C2700W MBNI2		2	操作部用 FOR CONTROL UNIT
			CODE NO.	000-881-447		
4	ｸﾘｱﾊﾞﾝﾎﾟﾝ CUSHION		TM-180-302		3	操作部用 FOR CONTROL UNIT
			CODE NO.	000-803-043		

03GL-X-9505

FURUNO ELECTRIC CO.,LTD.

（略図の寸法は、参考値です。 DIMENSIONS IN DRAWING FOR REFERENCE ONLY.）

FURUNO

CODE NO.	008-535-690	03GL-X-9506 -2
TYPE	FP03-09860	1/1

付属品表

ACCESSORIES

For RCU-015/016 Desktop mount kit

番号 NO.	名称 NAME	略図 OUTLINE	型名／規格 DESCRIPTIONS		数量 Q'TY	用途／備考 REMARKS
1	KB直付金具(T) KB FIXING METAL	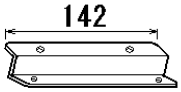	03-163-7821-1		1	操作部用 FOR CONTROL UNIT
			CODE NO.	100-306-291		
2	ﾌﾞﾗｲﾝﾄﾞｼｰﾙ SEAL	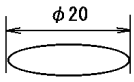	22-020-1005-1		3	操作部用 FOR CONTROL UNIT
			CODE NO.	100-173-591		
3	ｸﾞﾛﾒｯﾄ CAP	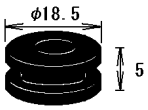	G-49		1	操作部用 FOR CONTROL UNIT
			CODE NO.	000-871-309		
4	+-ﾅﾍﾞｾﾑｽﾈｼﾞB WASHER HEAD SCREW	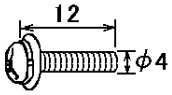	M4X12 C2700W MBNI2		2	操作部用 FOR CONTROL UNIT
			CODE NO.	000-881-447		
5	ｸﾘｱﾊﾞﾝﾎﾟﾝ CUSHION		TM-180-302		2	操作部用 FOR CONTROL UNIT
			CODE NO.	000-803-043		

03GL-X-9506

FURUNO ELECTRIC CO.,LTD.

（略図の寸法は、参考値です。 DIMENSIONS IN DRAWING FOR REFERENCE ONLY.）

FURUNO

CODE NO.	008-535-630	03GL-X-9503 -2
TYPE	FP03-09870	1/1

付属品表

ACCESSORIES

For RCU-014/015/016 Flush mount kit　　Option

番号 NO.	名称 NAME	略図 OUTLINE	型名／規格 DESCRIPTIONS		数量 Q'TY	用途／備考 REMARKS
1	ﾌﾗｯｼｭﾏｳﾝﾄ金具 FLUSH MOUNTING PLATE	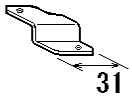	03-163-7531-1		4	
			CODE NO.	100-306-261		
2	+-ﾅﾍﾞｾﾑｽﾈｼﾞB WASHER HEAD SCREW	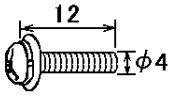	M4X12 C2700W MBNI2		4	
			CODE NO.	000-881-447		
3	六角ﾅｯﾄ　1種 HEX.NUT		M5 SUS304		4	
			CODE NO.	000-863-108		
4	蝶ﾎﾞﾙﾄ WING SCREW	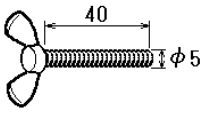	M5X40 SUS304		4	
			CODE NO.	000-149-997		

03GL-X-9503

FURUNO ELECTRIC CO.,LTD.

（略図の寸法は、参考値です。　DIMENSIONS IN DRAWING FOR REFERENCE ONLY.）

PACKING LIST

FP03-09820/09830 For MU-201CR/231CR Desktop mount kit Option

NAME	OUTLINE	DESCRIPTION/CODE №	Q'TY
付属品 ACCESSORIES		FP03-09820/09830	
六角ｾﾑｽB ｽﾘﾜﾘ HEX.BOLT (SLOTTED,WASHER HEAD)	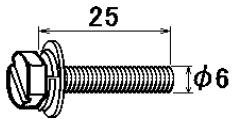	M6X25 SUS304 000-802-771	4
六角ﾎﾞﾙﾄ ｽﾘﾜﾘ HEX.BOLT	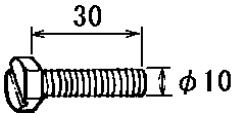	M10X30 SUS304 000-802-182	2
ﾊﾞﾈ座金 SPRING WASHER		M10 SUS304 000-864-261	2
ﾐｶﾞｷ平座金 FLAT WASHER		M10 SUS304 000-864-131	2
ｽﾅｯﾌﾟﾎﾞﾀﾝ PLASTIC RIVET	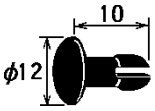	KB-13ﾖｳ ﾎﾞﾀﾝｸﾛ 000-570-276	4
ﾎｰﾙﾌﾟﾗｸﾞ HOLE PLUG	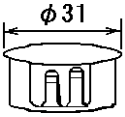	CP-30-HP-13 000-147-143	2
ﾊﾝｶﾞｰR(20) HANGER R	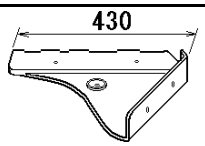	03-163-1112-0 100-305-180	1
ﾊﾝｶﾞｰL(20) HANGER L	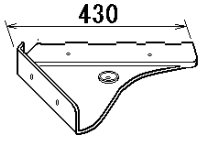	03-163-1111-0 100-305-140	1
ﾊﾝｶﾞｰｻｻｴ(20) HANGER STAY	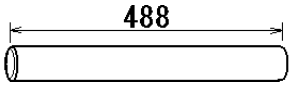	03-163-1113-0 100-305-190	1 (*1)
ﾊﾝｶﾞｰｻｻｴ(23) HANGER STAY	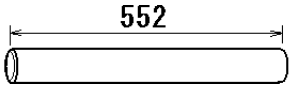	03-163-2071-0 100-305-370	1 (*2)

(*1)は、FP03-09820用です。
*1: FOR FP03-09820.
(*2)は、FP03-09830用です。
*2: FOR FP03-09830.

(略図の寸法は、参考値です。 DIMENSIONS IN DRAWING FOR REFERENCE ONLY.)

FURUNO

CODE NO.	008-535-570	03GL-X-9502 -0
TYPE	FP03-09840	1/1

付属品表

ACCESSORIES

For MU-201CR/MU-231CR

Option

番号 NO.	名称 NAME	略図 OUTLINE	型名／規格 DESCRIPTIONS		数量 Q'TY	用途／備考 REMARKS
1	取手 HANDLE	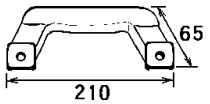	14-002-1125-2		2	
			CODE NO.	840-211-252		
2	ﾛｰｾﾞｯﾄ座金 ROSETTE WASHER	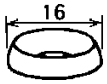	M6 C2700W ﾎﾟﾘｼｰﾙ ｸﾛ		4	
			CODE NO.	000-864-910		
3	+丸皿小ﾈｼﾞ OVAL COUNTERSUNK HEAD SCREW	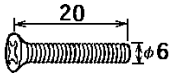	M6X20 C2700W ﾎﾟﾘｼｰﾙ ｸﾛ		4	
			CODE NO.	000-861-475		
4	波座金 WAVE WASHER		WW-6 SUS		4	
			CODE NO.	000-864-350		

03GL-X-9502

FURUNO ELECTRIC CO.,LTD.

（略図の寸法は、参考値です。 DIMENSIONS IN DRAWING FOR REFERENCE ONLY.）

PACKING LIST

CU-200-FAR

A-19

NAME	OUTLINE	DESCRIPTION/CODE №	Q'TY
ユニット UNIT			
ﾒﾓﾘｰｶｰﾄﾞｲﾝﾀｰﾌｪｲｽ MEMORY CARD INTERFACE	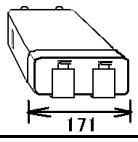	CU-200 000-081-569	1
工事材料 INSTALLATION MATERIALS			
工事材料 INSTALLATION MATERIALS		CP03-27401 008-539-520	1
その他工材 OTHER INSTALLATION MATERIALS			
ｹｰﾌﾞﾙ組品 CABLE ASSY.	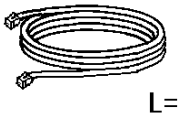	P5E-4PTX-BL 000-147-510	1
ｹｰﾌﾞﾙ組品MJ CABLE ASSY		MJ-A3SPF0015-100 000-142-974	1

（略図の寸法は、参考値です。 DIMENSIONS IN DRAWING FOR REFERENCE ONLY.）

FURUNO

CODE NO.	008-539-520	03G0-X-9403 -0
TYPE	CP03-27401	1/1

工事材料表

INSTALLATION MATERIALS

CU-200

番号 NO.	名称 NAME	略図 OUTLINE	型名／規格 DESCRIPTIONS		数量 Q'TY	用途／備考 REMARKS
1	ﾊﾞﾈ座金 SPPING WASHER		M4 SUS304		4	
			CODE NO.	000-864-256		
2	ﾐｶﾞｷ平座金 FLAT WASHER		M4 SUS304		4	
			CODE NO.	000-864-126		
3	六角ﾅｯﾄ　一種 HEX.NUT	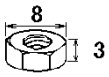	M4 SUS304		4	
			CODE NO.	000-863-106		
4	寸切ﾎﾞﾙﾄ THREADED ROD	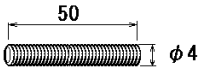	M4X50 SUS304		4	
			CODE NO.	000-147-539		

03G0-X-9403

FURUNO ELECTRIC CO.,LTD.

（略図の寸法は、参考値です。 DIMENSIONS IN DRAWING FOR REFERENCE ONLY.）

FURUNO

CODE NO.	008-539-530	03G0-X-9502 -0
TYPE	FP03-10201	1/1

付属品表

ACCESSORIES

For CU-200 Desktop mount kit

Option

番号 NO.	名称 NAME	略図 OUTLINE	型名／規格 DESCRIPTIONS		数量 Q'TY	用途／備考 REMARKS
1	ﾊﾝｶﾞｰ MOUNTING BRACKET	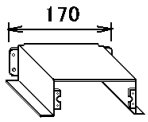	19-023-3081-0		1	
			CODE NO.	100-316-250		
2	+ﾄﾗｽﾀｯﾋﾟﾝﾈｼﾞ +TAPPING SCREW	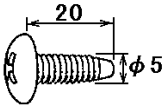	5X20 SUS304 1ｼｭ		4	
			CODE NO.	000-802-081		
3	+-ﾅﾍﾞｾﾑｽﾈｼﾞA WASHER HEAD SCREW	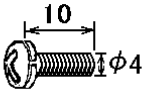	M4X10 C2700W MBNI2		4	
			CODE NO.	000-881-145		

03G0-X-9502

FURUNO ELECTRIC CO.,LTD.

（略図の寸法は、参考値です。 DIMENSIONS IN DRAWING FOR REFERENCE ONLY.）

FURUNO

CODE NO.	008-539-540	03G0-X-9503 -0
TYPE	FP03-10202	1/1

付属品表

ACCESSORIES

For CU-200 □
Console mount kit

Option

番号 NO.	名称 NAME	略図 OUTLINE	型名／規格 DESCRIPTIONS		数量 Q'TY	用途／備考 REMARKS
1	ｺﾝｿｰﾙﾖｳ取付材 MOUNTING BRACKET	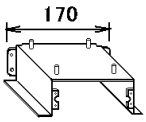	19-023-3091-0		1	
			CODE NO.	100-316-260		
2	ﾊﾞﾈ座金 SPPING WASHER		M4 SUS304		4	
			CODE NO.	000-864-256		
3	ﾐｶﾞｷ平座金 FLAT WASHER		M4 SUS304		4	
			CODE NO.	000-864-126		
4	六角ﾅｯﾄ　一種 HEX.NUT	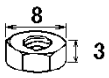	M4 SUS304		4	
			CODE NO.	000-863-106		
5	+-ﾅﾍﾞｾﾑｽﾈｼﾞA WASHER HEAD SCREW	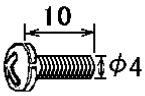	M4X10 C2700W MBNI2		4	
			CODE NO.	000-881-145		

03G0-X-9503

FURUNO ELECTRIC CO.,LTD.

（略図の寸法は、参考値です。 DIMENSIONS IN DRAWING FOR REFERENCE ONLY.）

PACKING LIST GC-10-2

NAME	OUTLINE	DESCRIPTION/CODE №	Q'TY
予備品 SPARE PARTS			
予備品 SPARE PARTS		SP03-13300 008-419-280	1
その他部品 OTHER PARTS			
NHｺﾈｸﾀ NH CONNECTOR ASSY.		03-2091(5P) 008-534-670	1
VHｺﾈｸﾀ VH CONNECTOR ASSY.	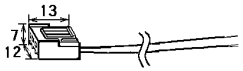	03-2090(3P) 008-534-660	1
VHｺﾈｸﾀ VH CONNECTOR ASSY.		03-2089(5P) 008-534-650	1
XH-PHｺﾈｸﾀ XH-PH CONNECTOR ASSY.	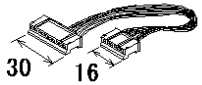	03-2088(6-14P) 008-534-640	1
演算ﾌﾟﾘﾝﾄ PROCESSOR BOARD	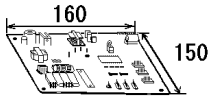	64P1106A 004-412-220	1
ｺﾈｸﾀ(231) CONNECTOR	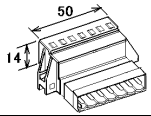	231-607/019-FUR 000-147-414	1
ｺﾈｸﾀ(231) CONNECTOR	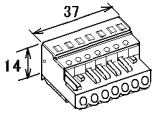	231-107/026-FUR 000-147-413	1

NAME	OUTLINE	DESCRIPTION/CODE №	Q'TY
+-ﾅﾍﾞｾﾑｽﾈｼﾞB WASHER HEAD SCREW	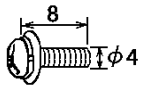	M4X8 C2700W MBNI2 000-881-445	3
+-ﾅﾍﾞｾﾑｽﾈｼﾞB WASHER HEAD SCREW	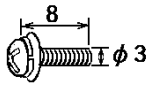	M3X8 C2700W MBNI2 000-881-404	5
+ﾅﾍﾞｾﾑｽﾈｼﾞA WASHER HEAD SCREW	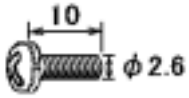	M2.6X10 C2700W MBNI2 000-801-844	2
ｸﾗﾝﾌﾟ CLAMP	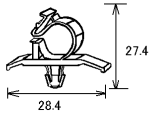	CKS-10-L 000-106-350	2
ｸﾗﾝﾌﾟ CLAMP	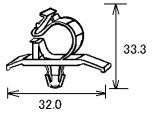	CKS-13-L 000-104-832	1
GCｶﾊﾞｰ GC COVER	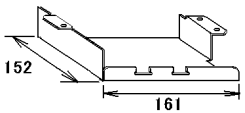	03-163-8071-2 100-305-682	1
ｴｯｼﾞｻﾄﾞﾙ CLAMP	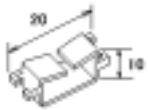	EDS-1 000-570-299	2

A-23

（略図の寸法は、参考値です。 DIMENSIONS IN DRAWING FOR REFERENCE ONLY.）

FURUNO

CODE NO.	008-535-640	03GL-X-9408 -3
TYPE	OP03-183	1/1

工事材料表

INSTALLATION MATERIALS

Coupling pedestal kit □
RCU-014 + MU-201CR

Option

番号 NO.	名称 NAME	略図 OUTLINE	型名／規格 DESCRIPTIONS		数量 Q'TY	用途／備考 REMARKS
1	連結金具B COUPLING FIXTURE	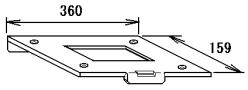	03-163-7604-0		1	RCU-014,MU-201CR用 FOR RCU-014 AND MU-201CR
			CODE NO.	100-308-270		
2	+-ﾅﾍﾞｾﾑｽﾈｼﾞB WASHER HEAD SCREW	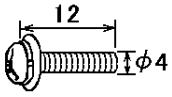	M4X12 C2700W MBNI2		4	RCU-014,MU-201CR用 FOR RCU-014 AND MU-201CR
			CODE NO.	000-881-447		
3	+-ﾅﾍﾞｾﾑｽﾈｼﾞB WASHER HEAD SCREW	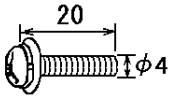	M4X20 C2700W MBNI2		2	RCU-014,MU-201CR用 FOR RCU-014 AND MU-201CR
			CODE NO.	000-881-451		
4	連結台(20)組品 COUPLING PLATE ASSY.	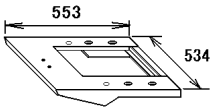	OP03-183-1		1	RCU-014,MU-201CR用 FOR RCU-014 AND MU-201CR
			CODE NO.	008-536-980		

03GL-X-9408

FURUNO ELECTRIC CO.,LTD.

（略図の寸法は、参考値です。 DIMENSIONS IN DRAWING FOR REFERENCE ONLY.）

FURUNO

CODE NO.	008-535-650	03GL-X-9409 -3
TYPE	OP03-184	1/1

工事材料表 INSTALLATION MATERIALS	Coupling pedestal kit □ RCU-014 + MU-231CR	Option

番号 NO.	名称 NAME	略図 OUTLINE	型名／規格 DESCRIPTIONS		数量 Q'TY	用途／備考 REMARKS
1	連結金具B COUPLING FIXTURE	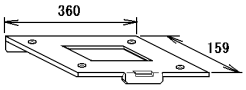	03-163-7604-0		1	RCU-014,MU-231CR用 FOR RCU-014 AND MU-231CR
			CODE NO.	100-308-270		
2	+-ﾅﾍﾞｾﾑｽﾈｼﾞB WASHER HEAD SCREW	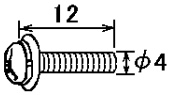	M4X12 C2700W MBNI2		4	RCU-014,MU-231CR用 FOR RCU-014 AND MU-231CR
			CODE NO.	000-881-447		
3	+-ﾅﾍﾞｾﾑｽﾈｼﾞB WASHER HEAD SCREW	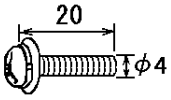	M4X20 C2700W MBNI2		2	RCU-014,MU-231CR用 FOR RCU-014 AND MU-231CR
			CODE NO.	000-881-451		
4	連結台(23)組品 COUPLING PLATE ASSY.	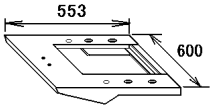	OP03-184-1		1	RCU-014,MU-231CR用 FOR RCU-014 AND MU-231CR
			CODE NO.	008-536-990		

03GL-X-9409

FURUNO ELECTRIC CO.,LTD.

（略図の寸法は、参考値です。 DIMENSIONS IN DRAWING FOR REFERENCE ONLY.）

PACKING LIST

0P03-180 DVI-RGB conversion kit Option

NAME	OUTLINE	DESCRIPTION/CODE №	Q'TY
その他部品 OTHER PARTS			
ﾊﾞﾈｻﾞｶﾞﾈ SPRING WASHER		M3 C5191W MBNI2 000-864-204	6
XHｺﾈｸﾀ組品 XH CONNECTOR ASSY.	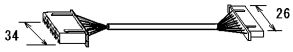	03-2094(13-10P) 008-534-710	1
XHｺﾈｸﾀ組品 XH CONNECTOR ASSY.	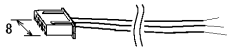	03-2093(3P) 008-534-700	1
VHｺﾈｸﾀ組品 VH CONNECTOR ASSY.	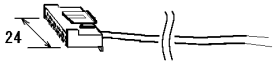	03-2092(6P) 008-534-690	1
ｽﾍﾟｰｻｰ SPACER	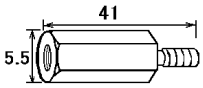	SQ-35 000-801-651	6
RGB-BUFFﾌﾟﾘﾝﾄ RGB-BUFF BOARD	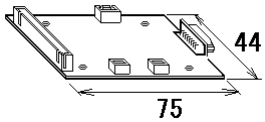	03P9229B 008-514-980	1
DVI-RGB組品 DVI-RGB ASSY.	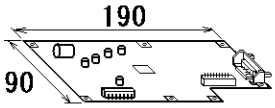	80-0667 008-537-660	1
+-ﾅﾍﾞｾﾑｽﾈｼﾞB WASHER HEAD SCREW	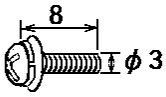	M3X8 C2700W MBNI2 000-881-404	10
ｹｰﾌﾞﾙ組品 CABLE ASSY.	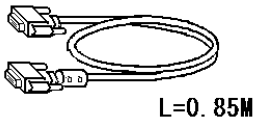	DVI-D/D S-LINK 0.85M 000-148-644	1

（略図の寸法は、参考値です。 DIMENSIONS IN DRAWING FOR REFERENCE ONLY.）

FURUNO

CODE NO.	008-536-810	03GL-X-9407 -2
TYPE	OP03-187	1/1

工事材料表 INSTALLATION MATERIALS	For LAN cable kit	Option

番号 NO.	名称 NAME	略図 OUTLINE	型名／規格 DESCRIPTIONS		数量 Q'TY	用途／備考 REMARKS
1	ｺﾈｸﾀ(ﾓｼﾞｭﾗｰ) MODULAR CONNCTOR	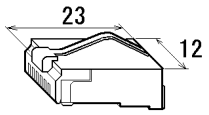	MPS588-C		2	
			CODE NO.	000-148-322		

03GL-X-9407

FURUNO ELECTRIC CO.,LTD.

（略図の寸法は、参考値です。 DIMENSIONS IN DRAWING FOR REFERENCE ONLY.）

FURUNO

CODE NO.	008-535-990	03GL-X-9303 -0 1/1
TYPE	SP03-14401	BOX NO. P

SHIP NO.	SPARE PARTS LIST FOR	U S E	SETS PER VESSEL
		MU-201CR AC set□ MU-231CR AC set	

ITEM NO.	NAME OF PART	OUTLINE	DWG. NO. OR TYPE NO.	QUANTITY WORKING PER SET	QUANTITY WORKING PER VES	QUANTITY SPARE	REMARKS/CODE NO.
1	ﾋｭｰｽﾞ FUSE	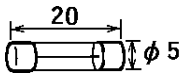	FGMB 2A 250V			2	表示部用 FOR DISPLAY UNIT 000-122-000

MFR'S NAME	FURUNO ELECTRIC CO.,LTD.	DWG NO.	03GL-X-9303	1/1

(略図の寸法は、参考値です。 DIMENSIONS IN DRAWING FOR REFERENCE ONLY.)

FURUNO

CODE NO.	008-535-910	03GL-X-9305 -0 1/1
TYPE	SP03-14404	BOX NO. P

SHIP NO.	SPARE PARTS LIST FOR	U S E	SETS PER VESSEL
		RPU-013 □ 100 VAC set	

ITEM NO.	NAME OF PART	OUTLINE	DWG. NO. OR TYPE NO.	QUANTITY WORKING PER SET	QUANTITY WORKING PER VES	QUANTITY SPARE	REMARKS/CODE NO.
1	ﾋｭｰｽﾞ FUSE	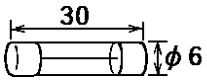	FGBO 10A AC125V			4	AC100用 制御部用 FOR PROCESSOR UNIT 000-549-065

MFR'S NAME	FURUNO ELECTRIC CO.,LTD.	DWG NO.	03GL-X-9305	1/1

(略図の寸法は、参考値です。 DIMENSIONS IN DRAWING FOR REFERENCE ONLY.)

FURUNO

CODE NO.	008-535-920	03GL-X-9306 -0 1/1
TYPE	SP03-14405	BOX NO. P

SHIP NO.	SPARE PARTS LIST FOR	U S E	SETS PER VESSEL
		RPU-013 □ 220 VAC set□	

ITEM NO.	NAME OF PART	OUTLINE	DWG. NO. OR TYPE NO.	QUANTITY WORKING PER SET	QUANTITY WORKING PER VES	QUANTITY SPARE	REMARKS/CODE NO.
1	ﾋｭｰｽﾞ FUSE	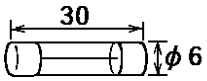	FGBO 5A AC250V			4	AC220用 制御部用 FOR PROCESSOR UNIT 000-549-022

MFR'S NAME	FURUNO ELECTRIC CO.,LTD.	DWG NO.	03GL-X-9306	1/1

(略図の寸法は、参考値です。 DIMENSIONS IN DRAWING FOR REFERENCE ONLY.)

FURUNO

CODE NO.	008-419-280	03GL-X-9302 -0 1/1
TYPE	SP03-13300	BOX NO. P

SHIP NO.	SPARE PARTS LIST FOR	U S E	SETS PER VESSEL
		GC-10	

ITEM NO.	NAME OF PART	OUTLINE	DWG. NO. OR TYPE NO.	QUANTITY WORKING PER SET	QUANTITY WORKING PER VES	QUANTITY SPARE	REMARKS/CODE NO.
1	ﾋｭｰｽﾞ FUSE	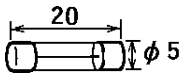	FGMB 2A 250V			8	ｼﾞｬｲﾛｺﾝﾊﾞｰﾀｰ用 FOR GYRO CONVERTER 000-122-000

MFR'S NAME	FURUNO ELECTRIC CO.,LTD.	DWG NO.	03GL-X-9302	1/1

(略図の寸法は、参考値です。 DIMENSIONS IN DRAWING FOR REFERENCE ONLY.)

FURUNO

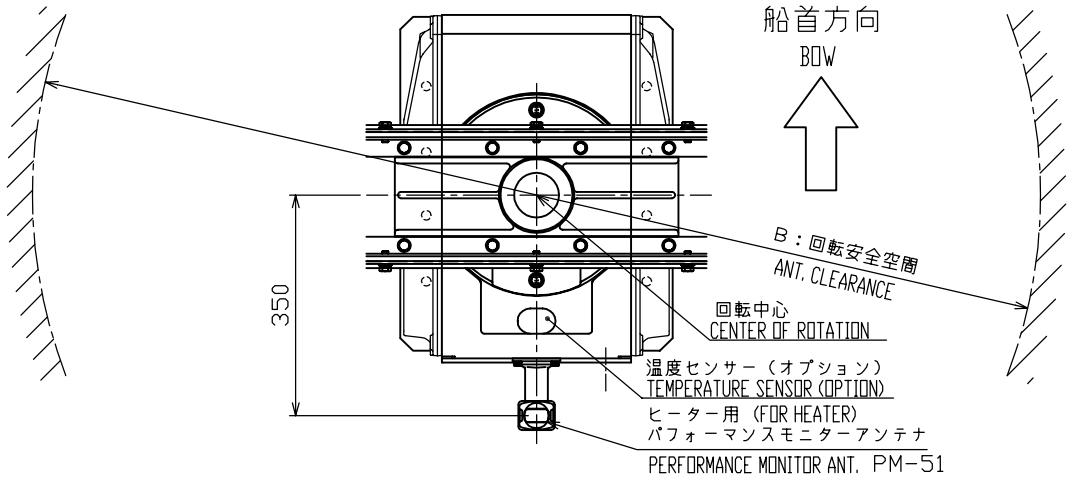

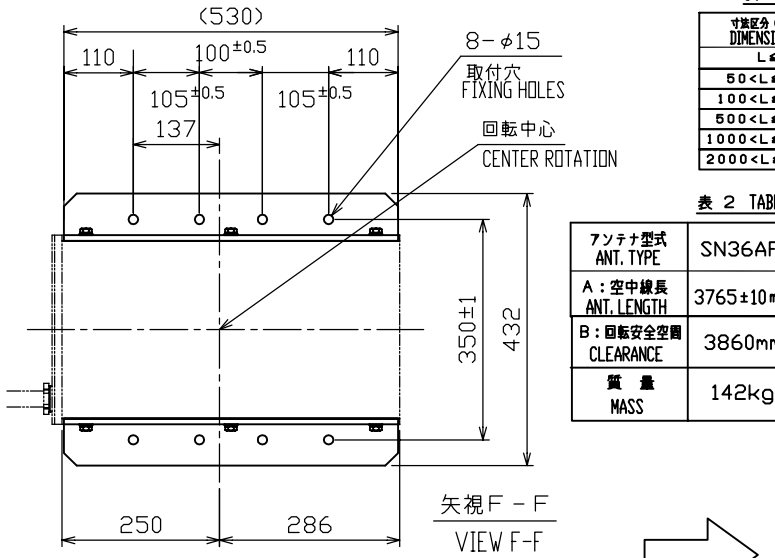

表 1 TABLE 1

寸法区分（mm） DIMENSIONS	公差（mm） TOLERANCE
L≦50	±1.5
50<L≦100	±2.5
100<L≦500	±3
500<L≦1000	±4
1000<L≦2000	±5
2000<L≦4000	±7

表 2 TABLE 2

アンテナ型式 ANT. TYPE	SN36AF	SN30AF
A：空中線長 ANT. LENGTH	3765±10mm	3090±10mm
B：回転安全空間 CLEARANCE	3860mm	3200mm
質量 MASS	142kg	135kg

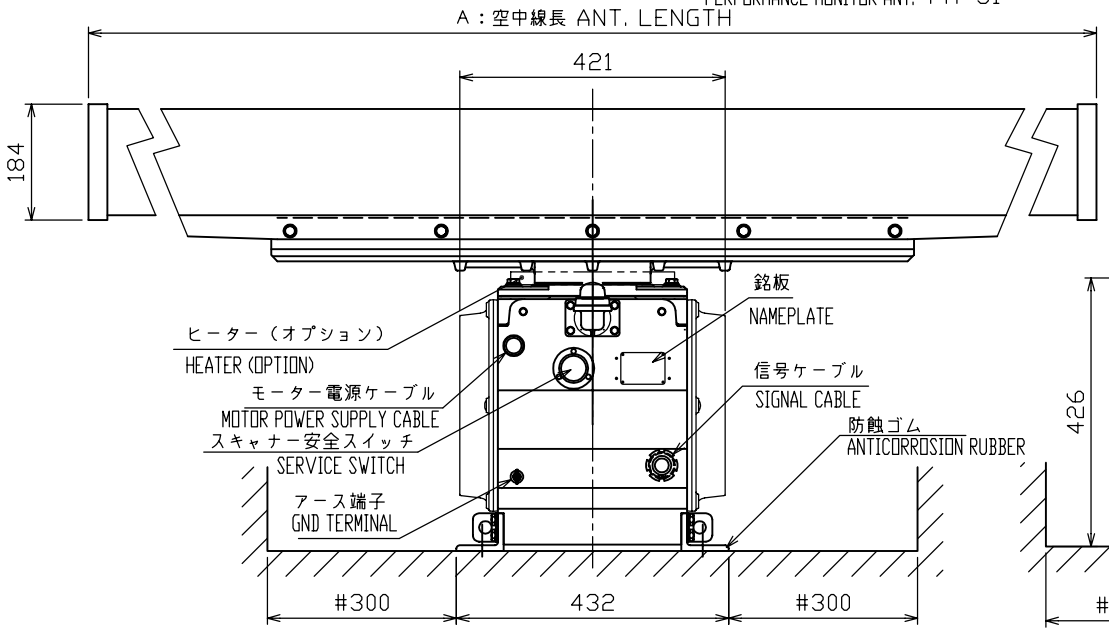

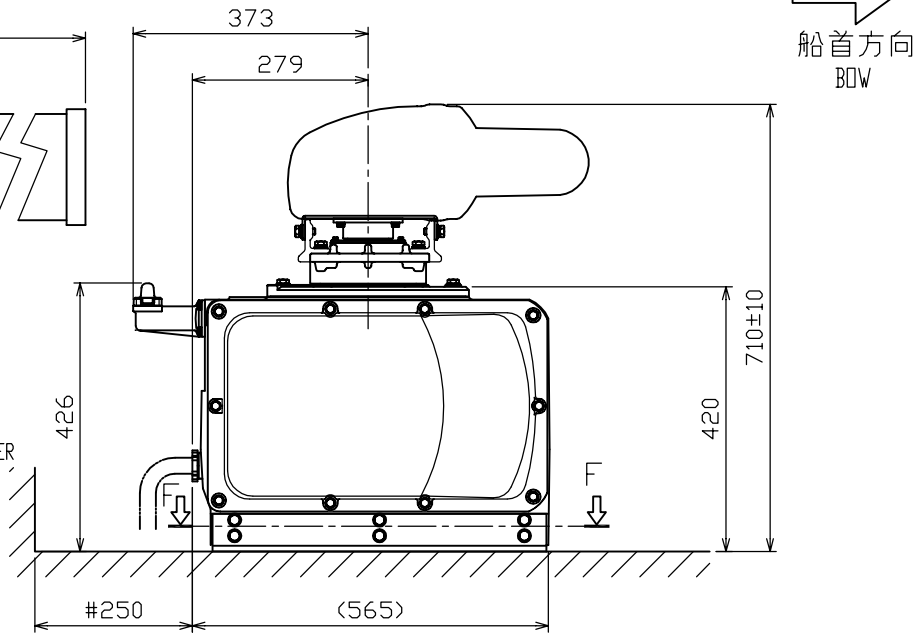

注 記

1） #印寸法は最小サービス空間寸法とする。
2） A，B寸法、及び質量は表2による。
3） 指定外の寸法公差は表1による。
4） 取付用ネジはM12ボルトを使用のこと。

NOTE

1. #: MINIMUM SERVICE CLEARANCE.
2. SEE TABLE 2 FOR DIMENSIONS OF A, B AND MASS.
3. TABLE 1 INDICATES TOLERANCE OF DIMENSIONS WHICH IS NOT SPECIFIED.
4. USE M12 BOLTS FOR FIXING THE UNIT.

DRAWN Apr. 28 '04 E.MIYOSHI			TITLE RSB-098/099/100/101/102
CHECKED TAKAHASHI. T			名称 空中線部
APPROVED Y. Hatai	FAR-2137S/2837S		外寸図
SCALE 1/12	MASS 表2参照 SEE TABLE 2		NAME ANTENNA UNIT
DWG.No. C3526-G01- B	03-163-300G-5		OUTLINE DRAWING

FURUNO ELECTRIC CO., LTD.

D-1

FURUNO

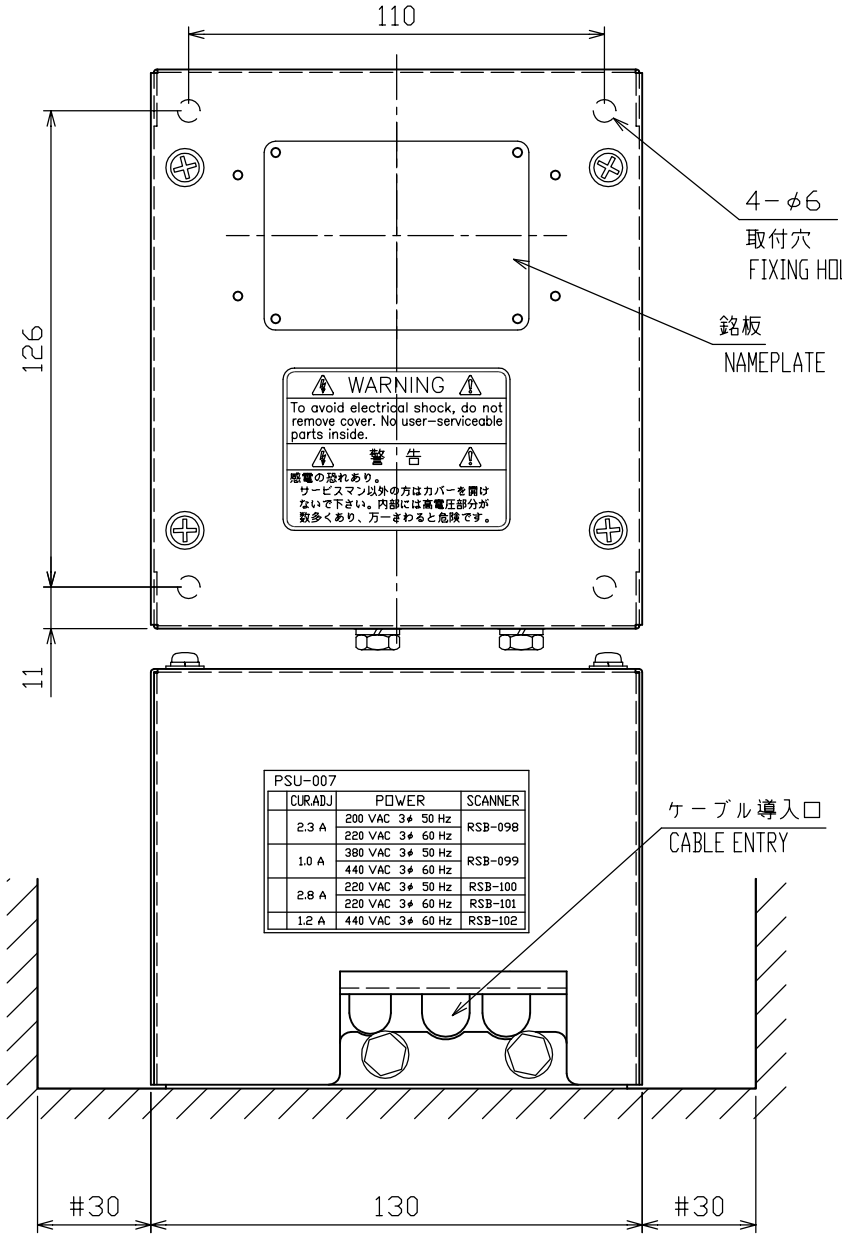

表 1 TABLE 1

寸法区分（mm）DIMENSIONS	公差（mm）TOLERANCE
L≦50	±1.5
50<L≦100	±2.5
100<L≦500	±3

注　記　1）　#印寸法は最小サービス空間寸法とする。
　　2）　指定外の寸法公差は表１による。
　　3）　取付にはトラスタッピンネジ呼び径５×２０を使用のこと。

NOTE　1.　#: MINIMUM SERVICE CLEARANCE.
　　2.　TABLE 1 INDICATES TOLERANCE OF DIMENSIONS WHICH IS NOT SPECIFIED.
　　3.　USE SELF-TAPPING SCREWS 5X20 FOR FIXING THE UNIT.

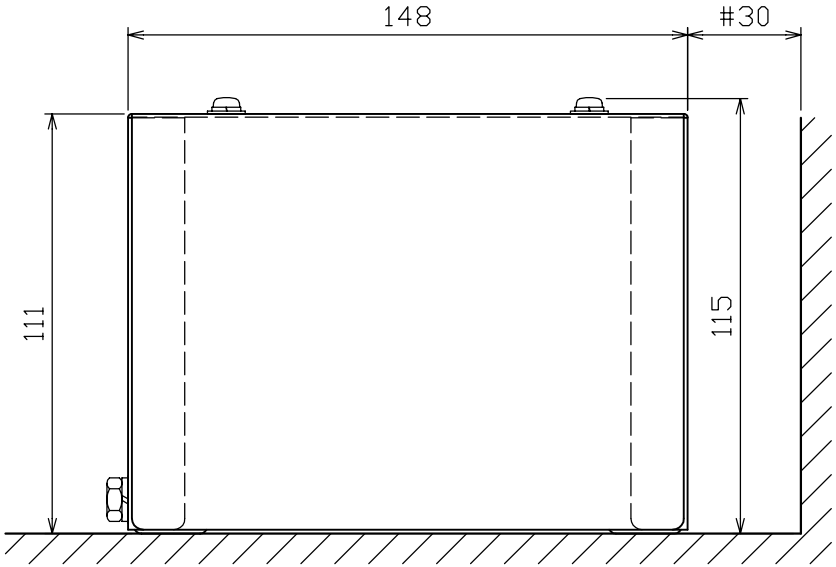

DRAWN Apr. 28 '04 E. MIYOSHI			TITLE PSU-007
CHECKED TAKAHASHI. T			名称 電源制御部
APPROVED Y. Hatai	FAR-2137S/2837S		外寸図
SCALE 1/2 MASS 0.9 ±10% kg			NAME POWER SUPPLY UNIT
DWG No. C3521-G01- B	03-163-330G-1		OUTLINE DRAWING

D-2

FURUNO ELECTRIC CO., LTD.

表 1 TABLE 1

寸法区分（mm） DIMENSIONS	公差（mm） TOLERANCE
L≦50	±1.5
50<L≦100	±2.5
100<L≦500	±3

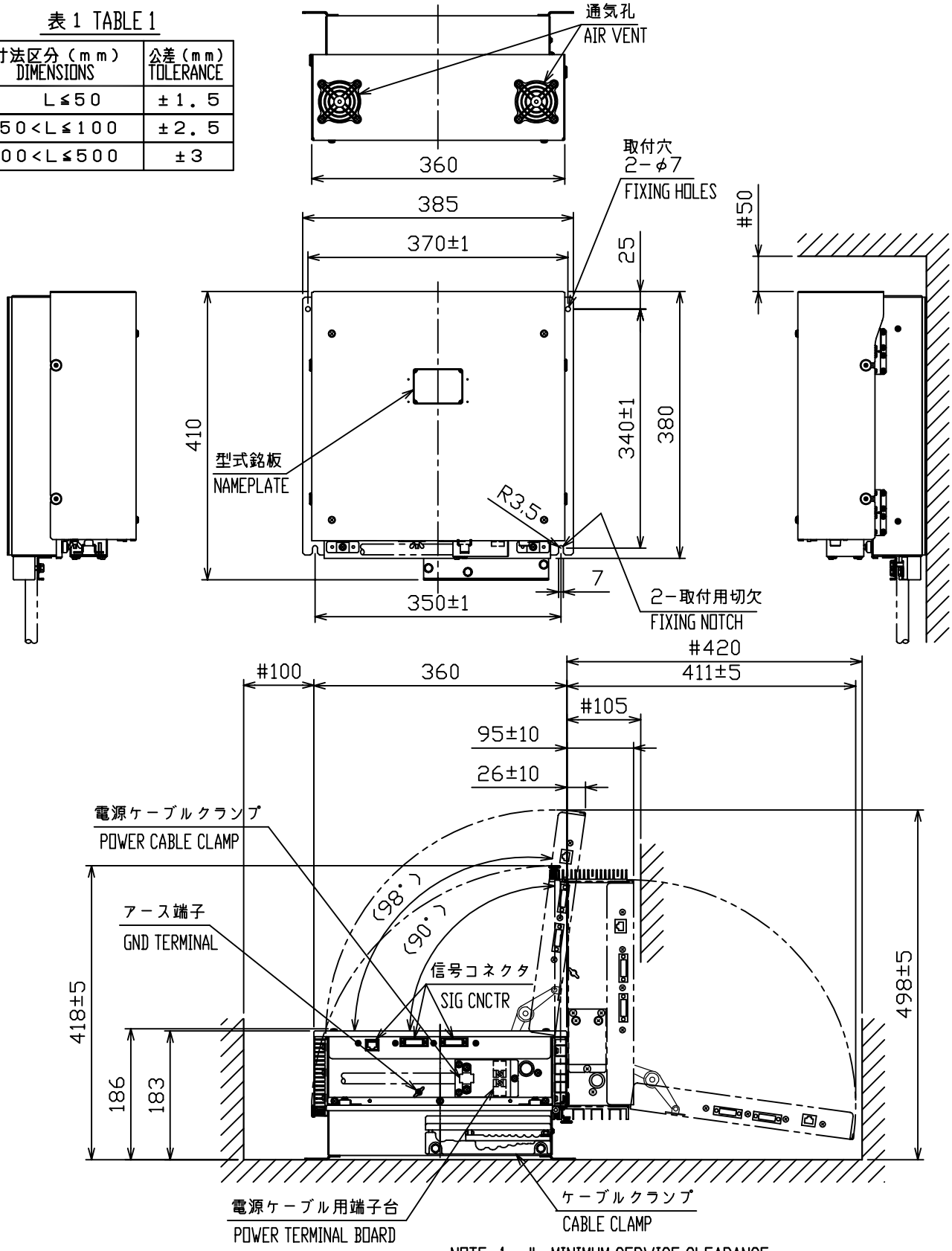

注　記　1）　#印寸法は最小サービス空間寸法とする。
2）　指定外の寸法公差は表1による。
3）　取付けはM6ボルト、またはコーチボルト呼び径6を使用のこと。

NOTE 1. #: MINIMUM SERVICE CLEARANCE.
2. TABLE 1 INDICATES TOLERANCE OF DIMENSIONS WHICH IS NOT SPECIFIED.
3. USE M6 BOLTS OR COACH SCREWS φ6 FOR FIXING THE UNIT.

DRAWN Nov 17 '03 E. MIYOSHI		TITLE	RPU-013
CHECKED Takahashi T.		名称	制御部
APPROVED Y. Hatai	FAR-2117/2817 SER.		外寸図
SCALE 1/8 MASS 10 ±10% kg		NAME	PROCESSOR UNIT
DWG.No. C3519-G03- C	03-163-800G-2		OUTLINE DRAWING

FURUNO

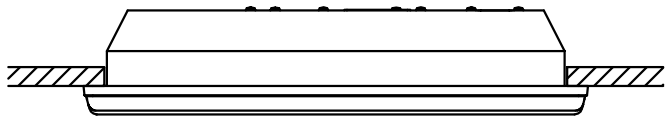

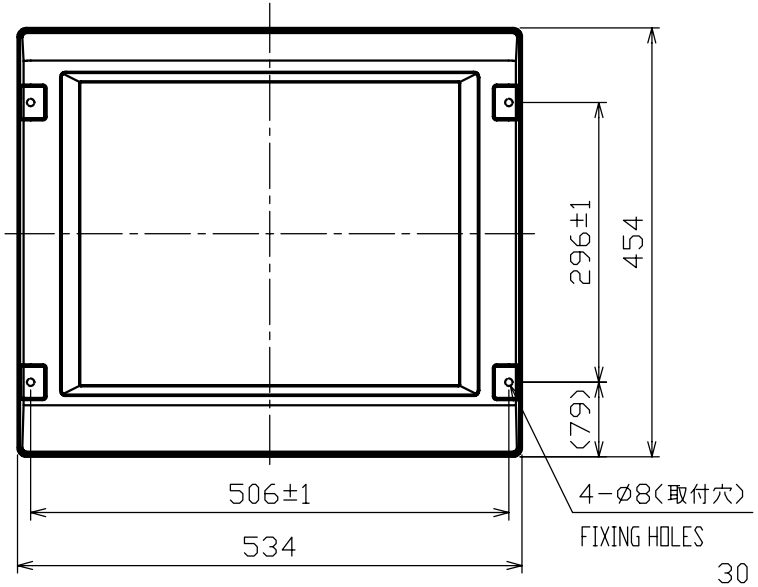

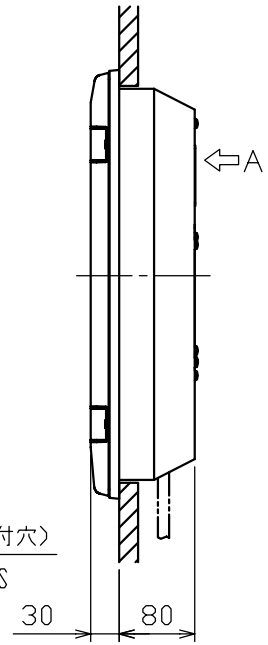

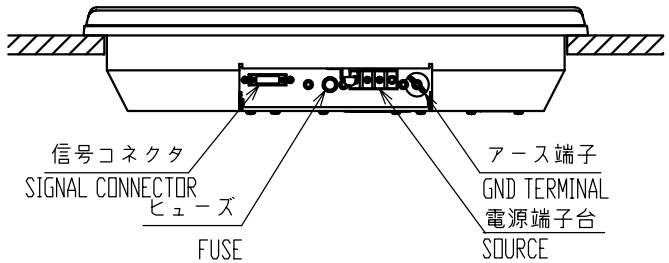

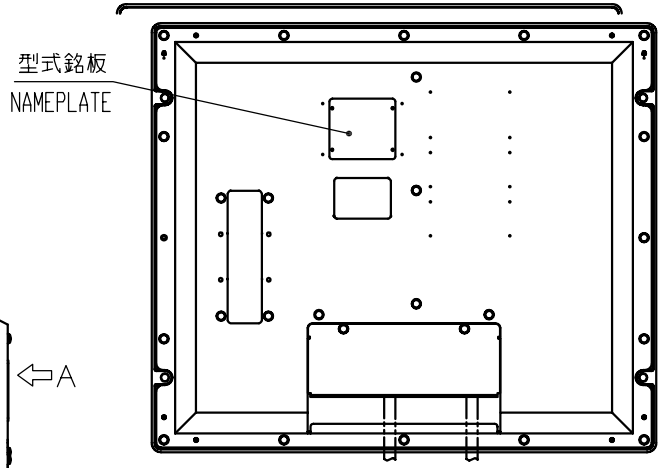

矢視A VIEW A

表1 TABLE 1

寸法区分（mm） DIMENSIONS	公差（mm） TOLERANCE
L≦50	±1.5
50<L≦100	±2.5
100<L≦500	±3
500<L≦1000	±4

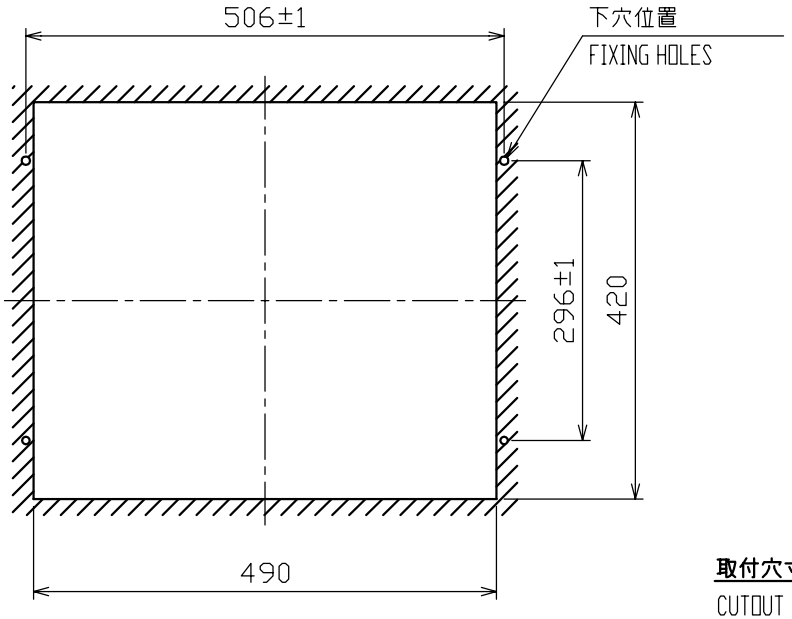

取付穴寸法図
CUTOUT DIMENTIONS

注　記　1）指定外の寸法公差は表1による。
　　2）取付には＋トラスタッピンネジ6×30を使用のこと。

NOTE　1. TABLE 1 INDICATES TOLERANCE OF DIMENSIONS WHICH IS NOT SPECIFIED.
　　2. USE TAPPING SCREWS 6x30 FOR FIXING THE UNIT.

DRAWN	Nov. 25 '03 E. MIYOSHI		TITLE MU-201CR
CHECKED	Takahashi T.		名称 表示部（埋込装備）
APPROVED	Y. Hatai	FAR-2117 SER.	外寸図
SCALE 1/8	MASS 11.0 ±10% kg		NAME MONITOR UNIT (FLUSH MOUNT)
DWG.No.	C3519-G05- B	03-163-110G-2	OUTLINE DRAWING

FURUNO ELECTRIC CO., LTD.

FURUNO

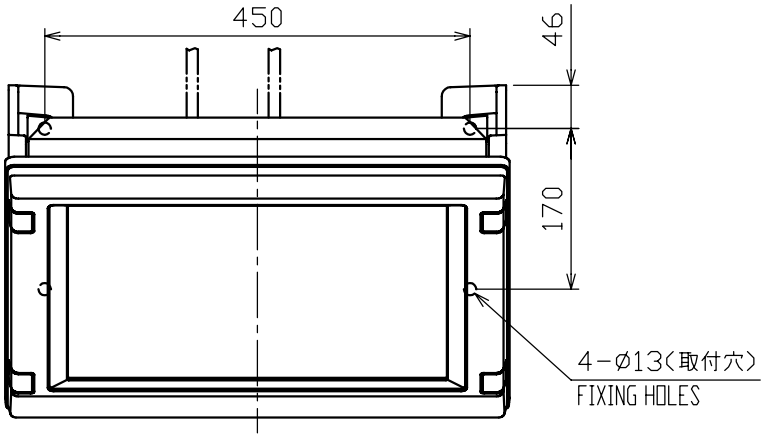

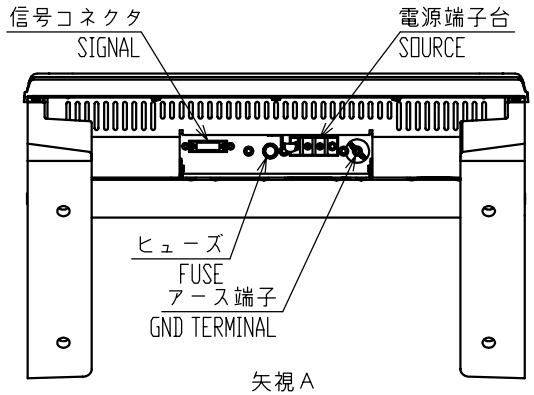

表 1 TABLE 1

寸法区分（mm）DIMENSIONS	公差（mm）TOLERANCE
L≦50	±1.5
50<L≦100	±2.5
100<L≦500	±3
500<L≦1000	±4

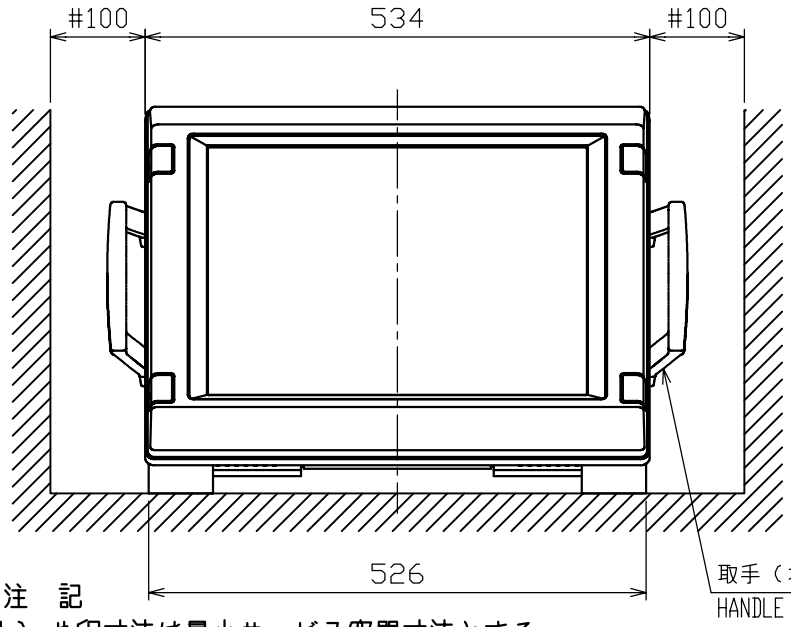

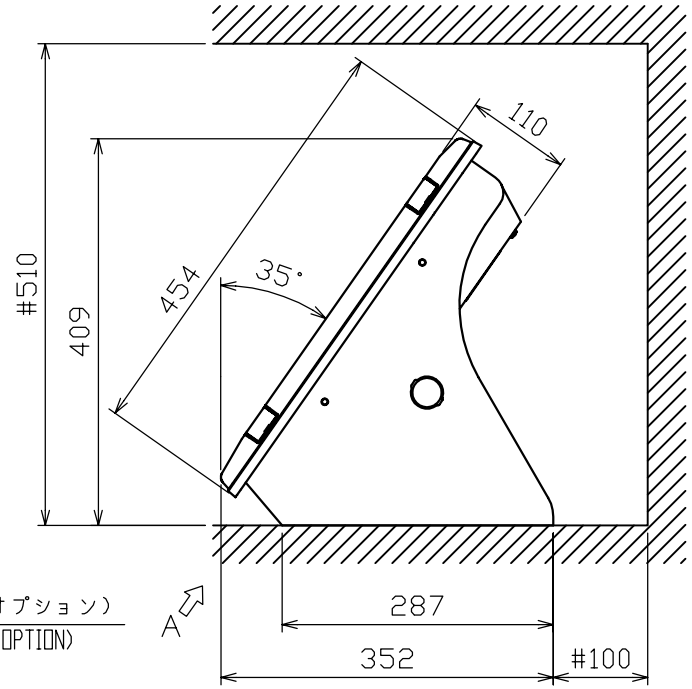

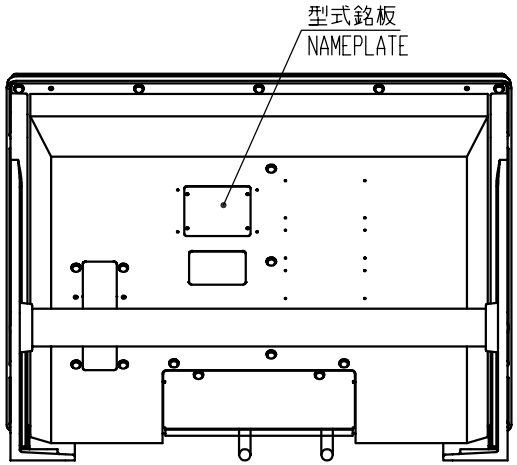

注　記

1）＃印寸法は最小サービス空間寸法とする。

2）指定外の寸法公差は表１による。

3）取付にはＭ１０ボルトまたはコーチボルト呼び径９を使用のこと。

NOTE

1. #: MINIMUM SERVICE CLEARANCE.
2. TABLE 1 INDICATES TOLERANCE OF DIMENSIONS WHICH IS NOT SPECIFIED.
3. USE M10 BOLTS OR COACH SCREWS ϕ9 FOR FIXING THE UNIT.

DRAWN	Jan. 7 '04 E. MIYOSHI		TITLE MU-201CR
CHECKED	Takahashi T.		名称 表示部（卓上装備）
APPROVED	Y. Hatai	FAR-2117 SER.	外寸図
SCALE 1/8	MASS 17.0 ±10% kg		NAME MONITOR UNIT (DESKTOP MOUNT)
DWG.No.	C3519-G04- B	03-163-100G-2	OUTLINE DRAWING

FURUNO ELECTRIC CO., LTD.

FURUNO

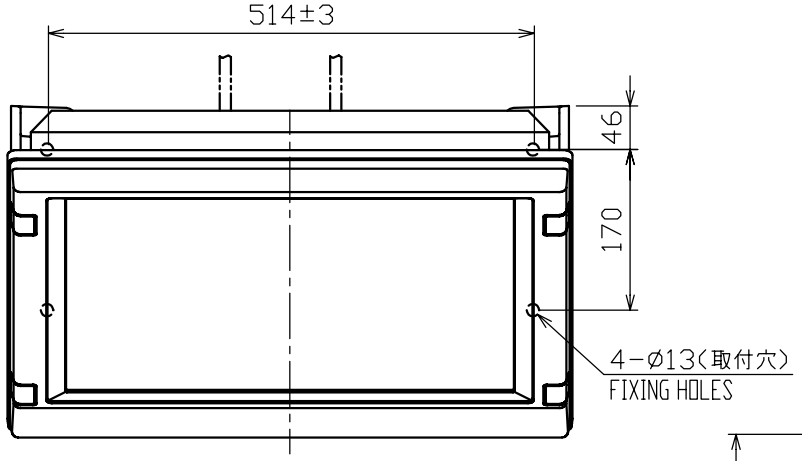

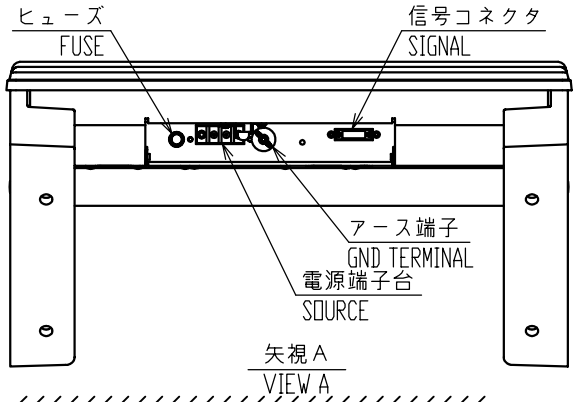

表1 TABLE 1

寸法区分（mm） DIMENSIONS	公差（mm） TOLERANCE
L≦50	±1.5
50<L≦100	±2.5
100<L≦500	±3
500<L≦1000	±4

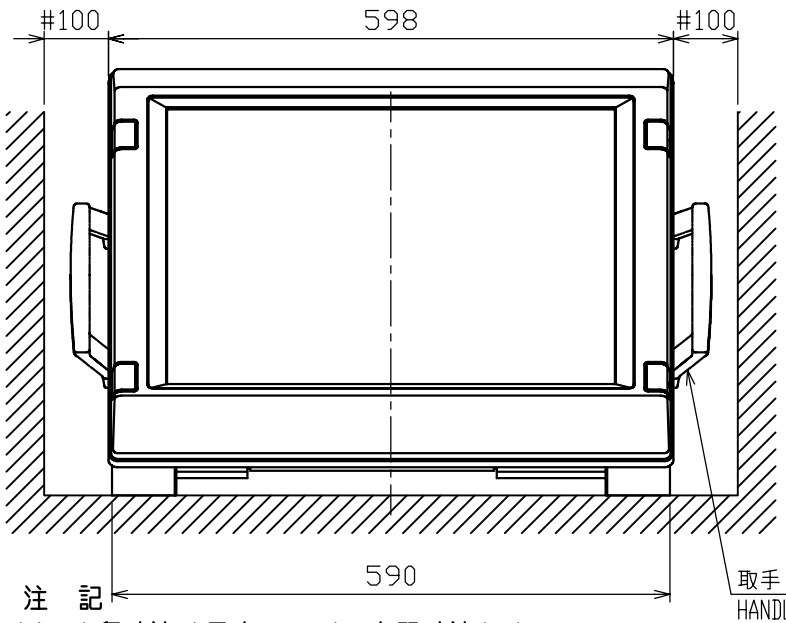

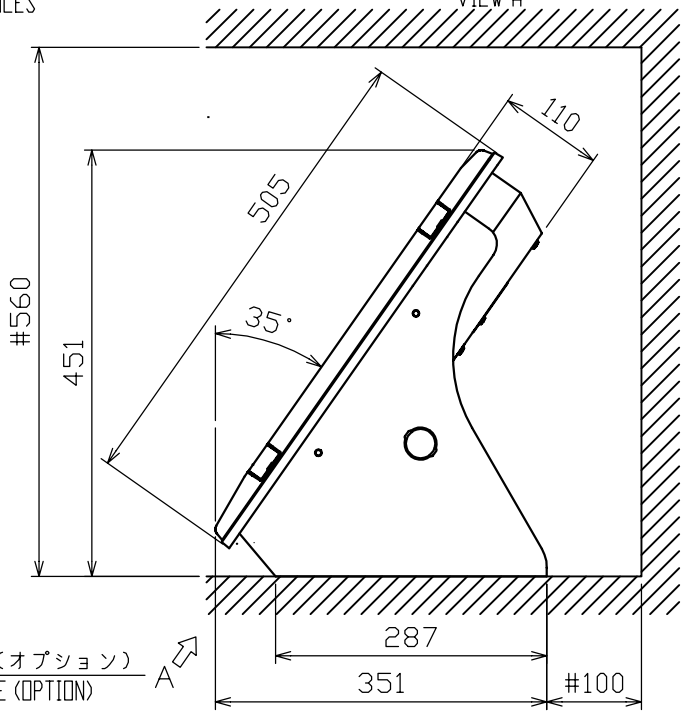

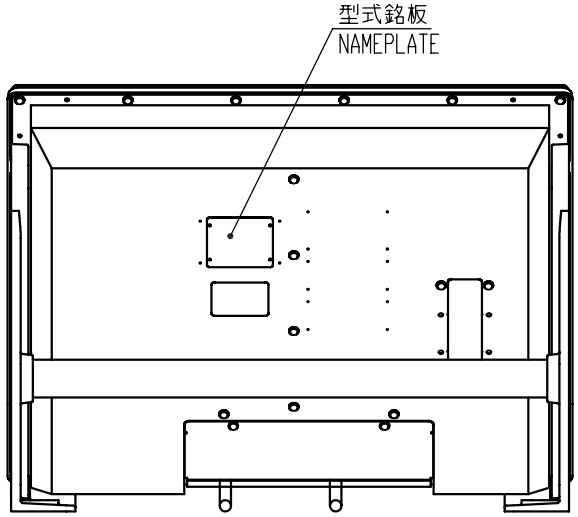

注　記

1）＃印寸法は最小サービス空間寸法とする。

2）指定外の寸法公差は表1による。

3）取付にはM10ボルトまたはコーチボルト呼び径9を使用のこと。

NOTE

1. #: MINIMUM SERVICE CLEARANCE.
2. TABLE 1 INDICATES TOLERANCE OF DIMENSIONS WHICH IS NOT SPECIFIED.
3. USE M10 BOLTS OR COACH SCREWS ø9 FOR FIXING THE UNIT.

DRAWN	Jan. 7 '04 E. MIYOSHI		TITLE MU-231CR
CHECKED	Takahashi T.		名称 表示部（卓上装備）
APPROVED	Y. Hatai	FAR-2817 SER.	外寸図
SCALE 1/8	MASS 22 ±10% kg		NAME MONITOR UNIT (DESKTOP MOUNT)
DWG.No.	C3524-G01- B	03-163-200G-2	OUTLINE DRAWING

FURUNO ELECTRIC CO., LTD.

FURUNO

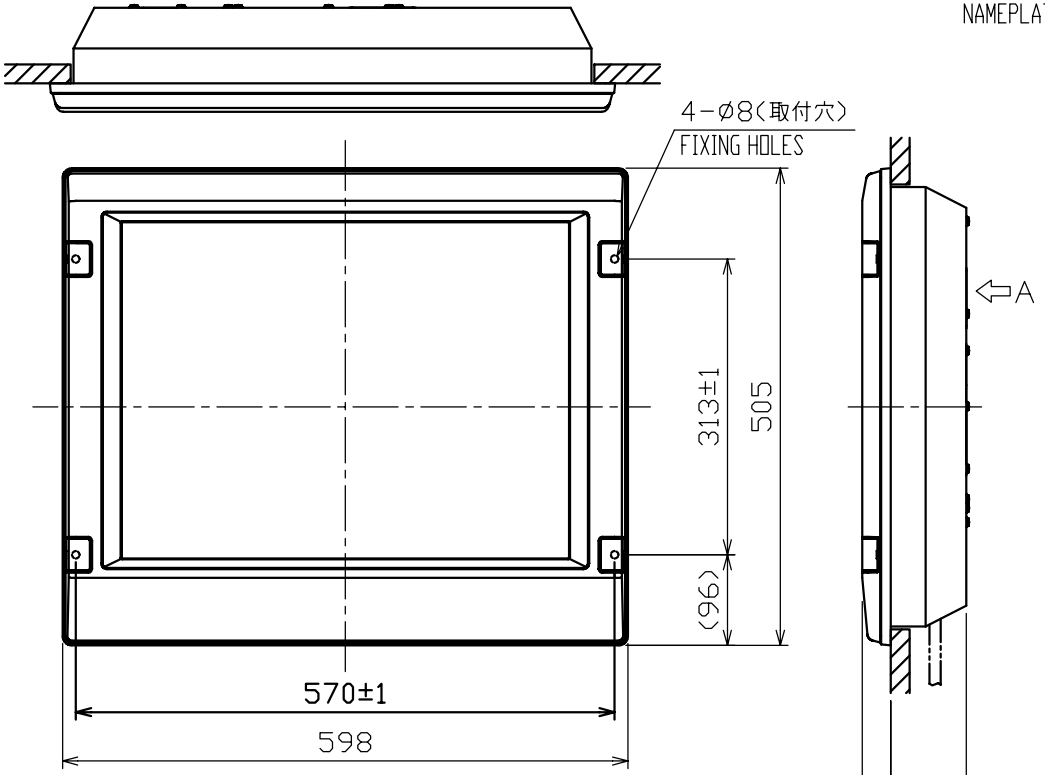

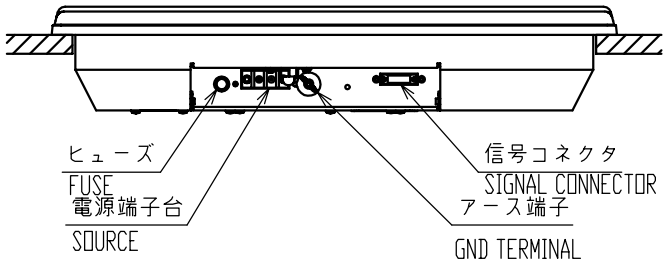

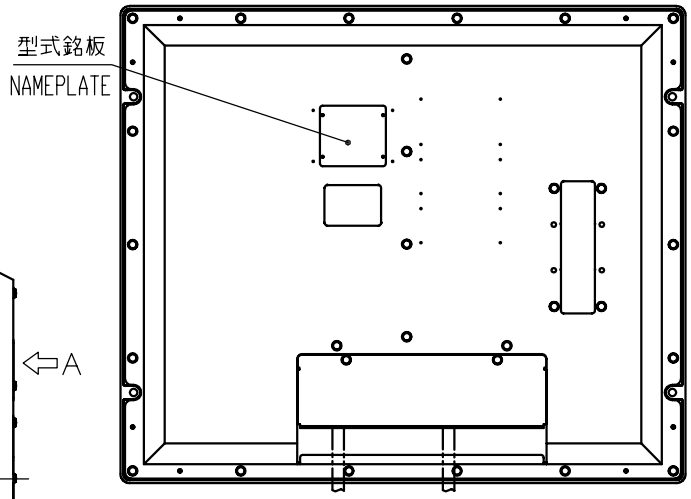

矢視A
VIEW A

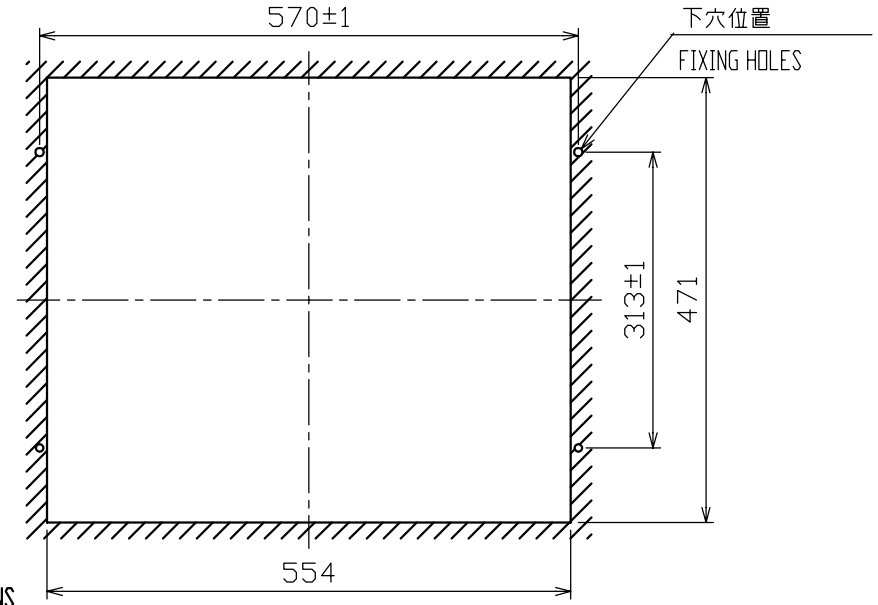

取付穴寸法図
CUTOUT DIMENSIONS

表1 TABLE 1

寸法区分（mm）DIMENSIONS	公差（mm）TOLERANCE
L≦50	±1.5
50<L≦100	±2.5
100<L≦500	±3
500<L≦1000	±4

注　記　1）指定外の寸法公差は表1による。
　　2）取付には＋トラスタッピンネジ6×30を使用のこと。

NOTE　1.　TABLE 1 INDICATES TOLERANCE OF DIMENSIONS WHICH IS NOT SPECIFIED.
　　2.　USE TAPPING SCREWS 6x30 FOR FIXING THE UNIT.

DRAWN	Nov. 26 '03 E. MIYOSHI		TITLE MU-231CR
CHECKED	Takahashi T.		名称 表示部（埋込装備）
APPROVED	Y. Hatai	FAR-2817 SER.	外寸図
SCALE 1/8	MASS 15.0 ±10% kg		NAME MONITOR UNIT (FLUSH MOUNT)
DWG.No.	C3524-G02- B	03-163-210G-2	OUTLINE DRAWING

FURUNO ELECTRIC CO., LTD.

FURUNO

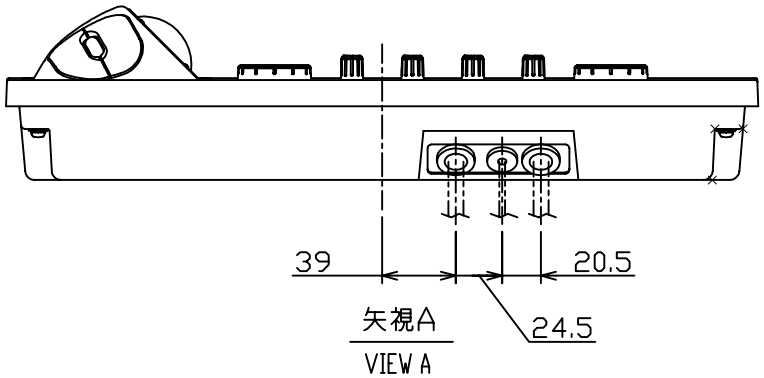

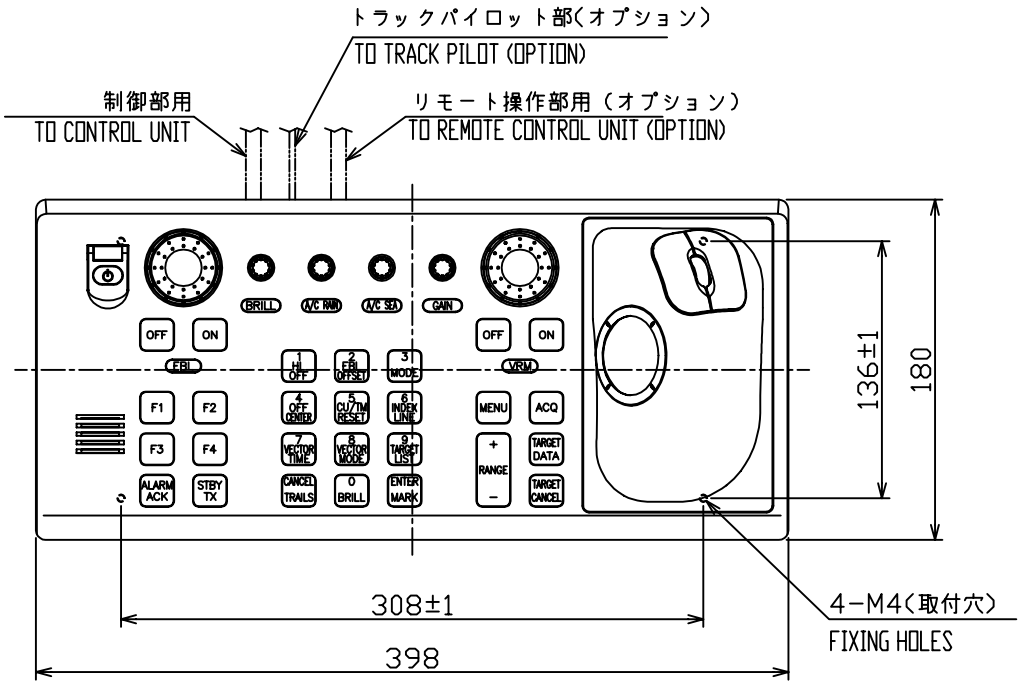

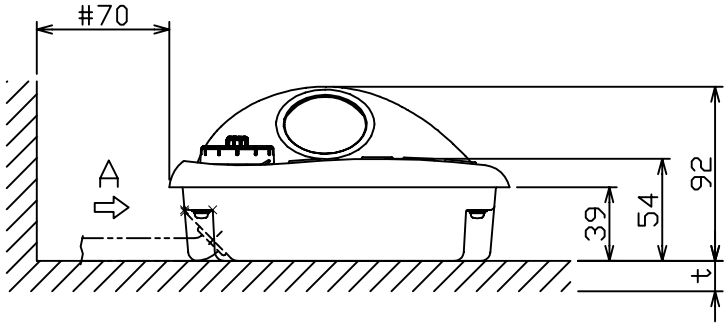

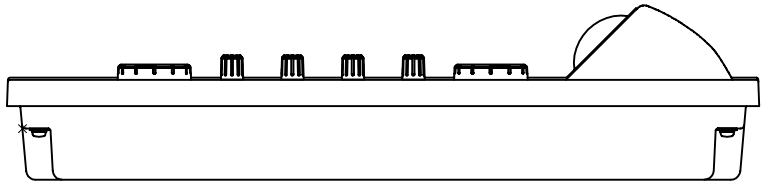

表1 TABLE 1

寸法区分(mm) DIMENSIONS	公差(mm) TOLERANCE
L≦50	±1.5
50<L≦100	±2.5
100<L≦500	±3

注　記　1)　#印寸法は最小サービス空間寸法とする。
　　2)　指定外の寸法公差は表1による。
　　3)　取付用ネジはセムスB(M4X(t+4))を使用のこと。
　　4)　質量はケーブル(10m)を含む

NOTE
1. #: MINIMUM SERVICE CLEARANCE.
2. TABLE 1 INDICATES TOLERANCE OF DIMENSIONS WHICH IS NOT SPECIFIED.
3. USE SEMS SCREWS M4x(t+4) FOR FIXING THE UNIT.
4. MASS IN CLUDES CABLE (10M).

DRAWN	Jan. 26 '03 E. MIYOSHI		TITLE RCU-014
CHECKED	Takahashi T.		名称 操作部
APPROVED	Y. Hatai	FAR-2117/2817 SER.	外寸図
SCALE 1/4	MASS 3.7 ±10% kg		NAME CONTROL UNIT
DWG.No.	C3519-G06-C	03-163-750G-3	OUTLINE DRAWING

FURUNO ELECTRIC CO., LTD.

FURUNO

表１ TABLE 1

寸法区分（ｍｍ） DIMENSIONS	公差（ｍｍ） TOLERANCE
Ｌ≦５０	±１．５
５０<Ｌ≦１００	±２．５
１００<Ｌ≦５００	±３

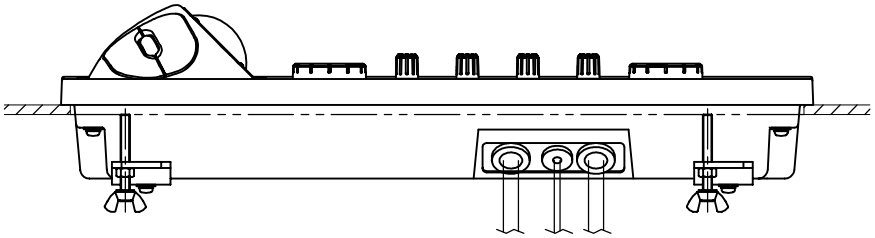

矢視Ａ
VIEW A

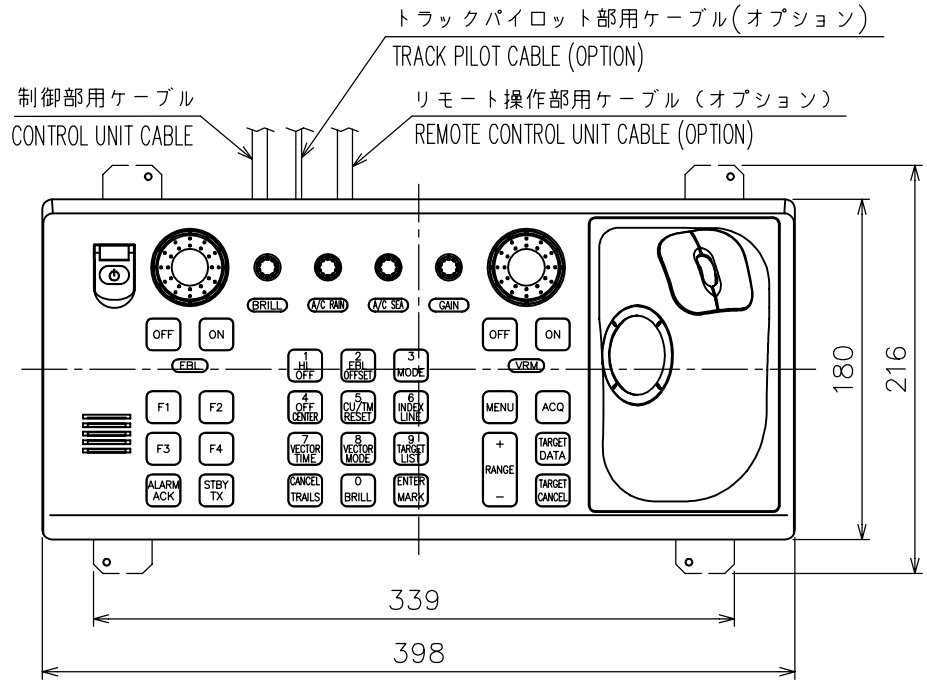

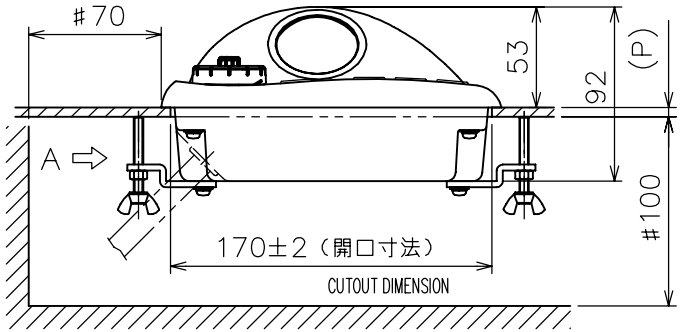

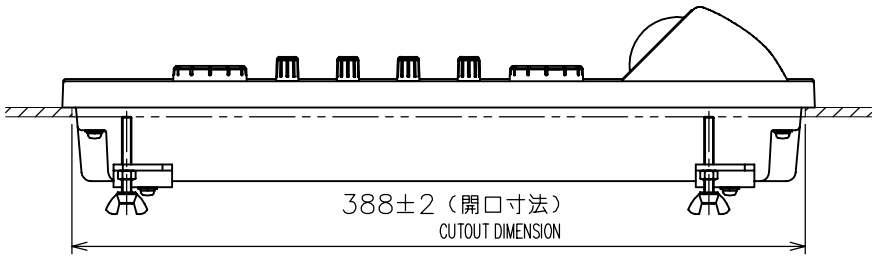

NOTE
1. #: MINIMUM SERVICE CLEARANCE.
2. TABLE 1 INDICATES TOLERANCE OF DIMENSIONS WHICH IS NOT SPECIFIED.
3. MASS INCLUDES CABLE (10M).
4. THICKNESS (P) 20 MM MAX.

注　記　１）＃印寸法は最小サービス空間寸法とする。
２）指定外の寸法公差は表１による。
３）質量はケーブル（１０ｍ）を含む
４）壁の厚さ（Ｐ）は最大２０とする

DRAWN	Mar. 17 '04 E. MIYOSHI		TITLE RCU-014
CHECKED	TAKAHASHI.T		名称 操作部（埋込装備）
APPROVED	Y. Hatai	FAR-2817 SER.	外寸図
SCALE 1/4	MASS 3.8 ±10% kg		NAME CONTROL UNIT (FLUSH MOUNT)
DWG.No.	C3524-G04- C	03-163-751G-2	OUTLINE DRAWING

FURUNO

表１ TABLE 1

寸法区分（ｍｍ） DIMENSIONS	公差（ｍｍ） TOLERANCE
L≦50	±1.5
50<L≦100	±2.5
100<L≦500	±3

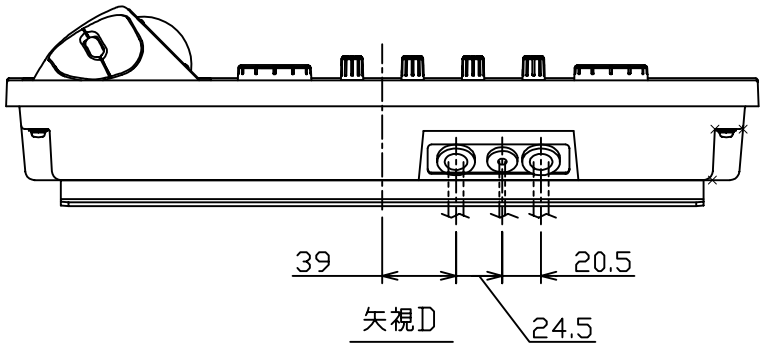

矢視D
VIEW D

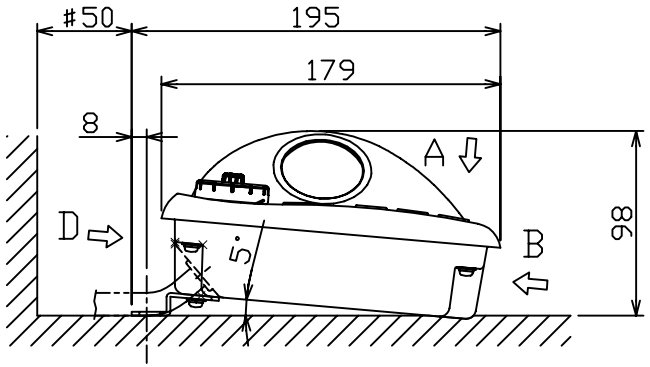

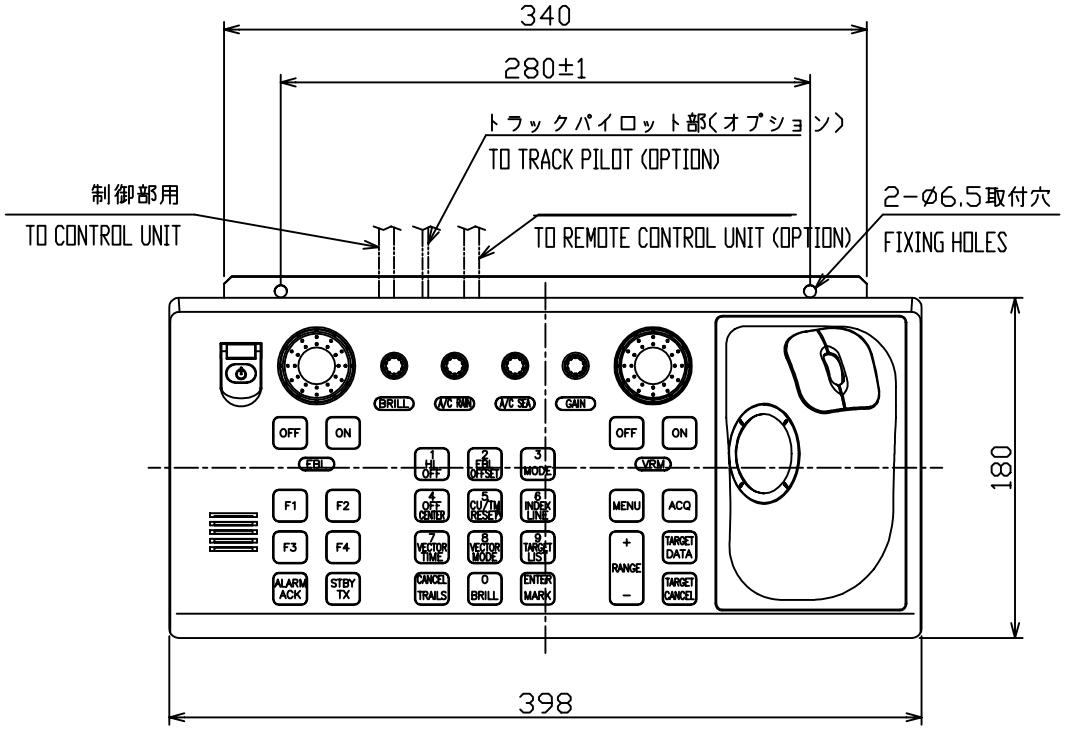

矢視A VIEW A

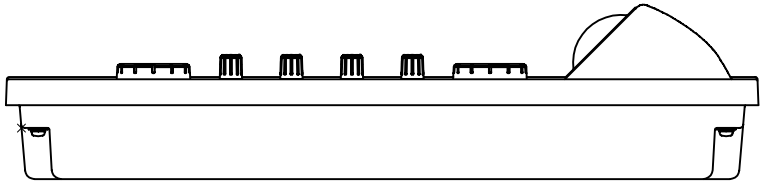

矢視B VIEW B

NOTE
1. #: MINIMUM SERVICE CLEARANCE.
2. TABLE 1 INDICATES TOLERANCE OF DIMENSIONS WHICH IS NOT SPECIFIED.
3. USE TAPPING SCREWS (φ6) OR M6 BOLTS FOR FIXING.
4. MASS INCLUDES CABLE (10M).

注　記　１）＃印寸法は最小サービス空間寸法とする。
２）指定外の寸法公差は表１による。
３）取付用ネジはトラスタッピンネジ呼び径６、またはＭ６ボルトを使用のこと
４）質量はケーブル（１０ｍ)を含む

DRAWN Jan. 7 '04 E. MIYOSHI			TITLE RCU-014
CHECKED Takahashi T.			名称 操作部（直付金具装備）
APPROVED Y. Hatai	FAR-2817 SER.		外寸図
SCALE 1/4	MASS 4.0 ±10% kg		NAME CONTROL UNIT (DESKTOP W/KB PLATE)
DWG.No. C3524-G05- B	03-163-752G-1		OUTLINE DRAWING

FURUNO ELECTRIC CO., LTD.

FURUNO

表１ TABLE 1

寸法区分（ｍｍ） DIMENSIONS	公差（ｍｍ） TOLERANCE
L≦50	±1.5
50<L≦100	±2.5
100<L≦500	±3

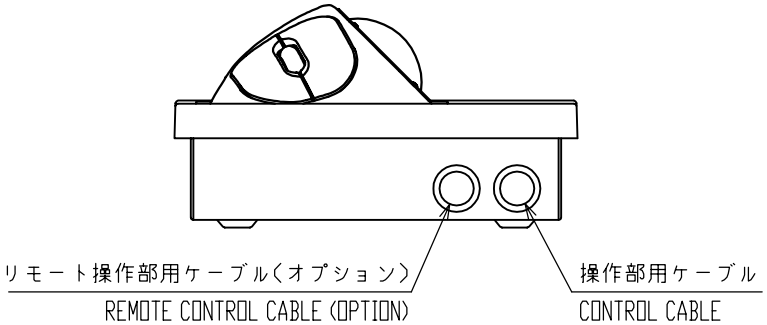

矢視A
VIEW A

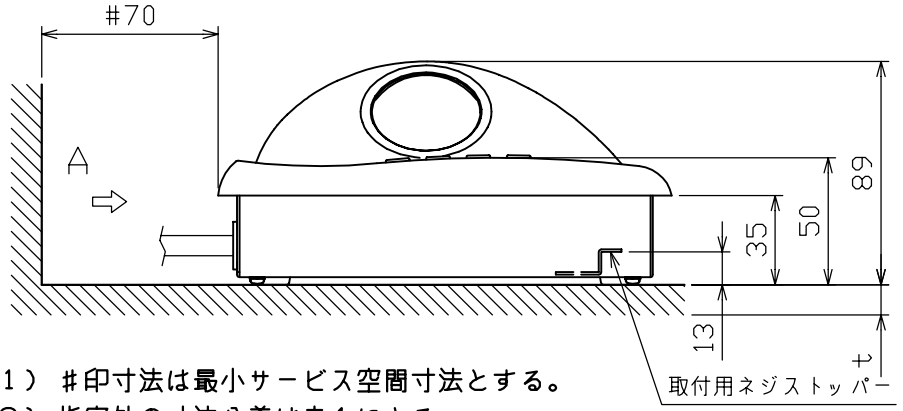

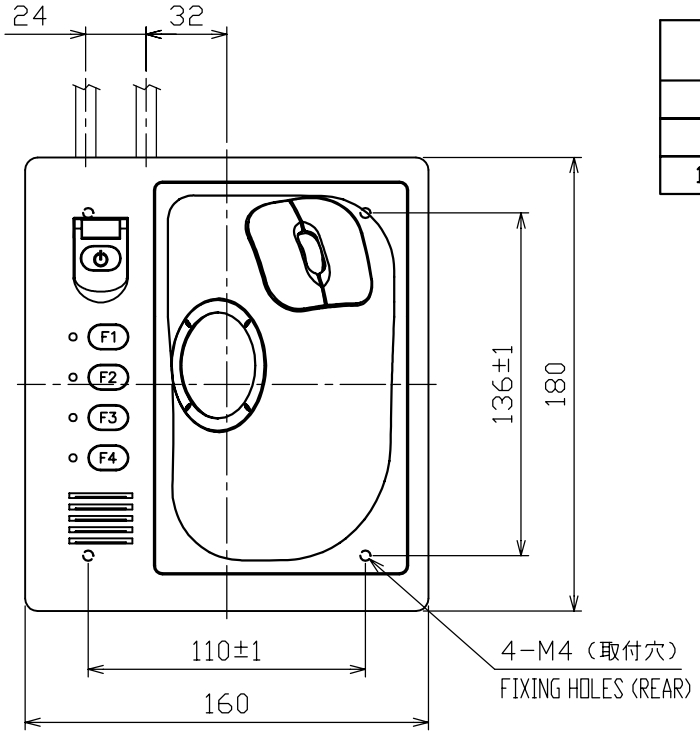

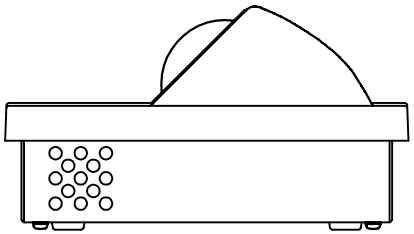

NOTE

1. #: MINIMUM SERVICE CLEARANCE.
2. TABLE 1 INDICATES TOLERANCE OF DIMENSIONS WHICH IS NOT SPECIFIED.
3. USE M4x12 SCREWS FOR FIXING. THICKNESS OF MOUNTING SURFACE SHOULD BE 2.5 CM. FOR GREATOR THICKNESS USE SCREW WHOSE LINGTH IS (M4X(t+7.8)) ±2.
4. MASS INCLUDES CABLE (10).

注　記　１）＃印寸法は最小サービス空間寸法とする。
２）指定外の寸法公差は表１による。
３）取付用ネジはセムスＢ（Ｍ４Ｘ１２）を使用のこと。
取付面板厚は最小２最大５とする。
それ以外はネジ長さ（Ｍ４Ｘ（ｔ＋７．８））±２
のセムスＢを使用のこと。
４）質量はケーブル（１０ｍ）を含む

DRAWN Jan. 7 '04 E. MIYOSHI			TITLE RCU-015
CHECKED Takahashi T.			名称 操作部（卓上装備）
APPROVED Y. Hatai		FAR-2117 SER.	外寸図
SCALE 1/3	MASS 2.4 ±10% kg	質量は10mケーブル重さを含む。 MASS W/ 10m CABLE	NAME CONTROL UNIT (DESKTOP MOUNT)
DWG.No. C3519-G13- B		03-163-785G-2	OUTLINE DRAWING

FURUNO ELECTRIC CO., LTD.

FURUNO

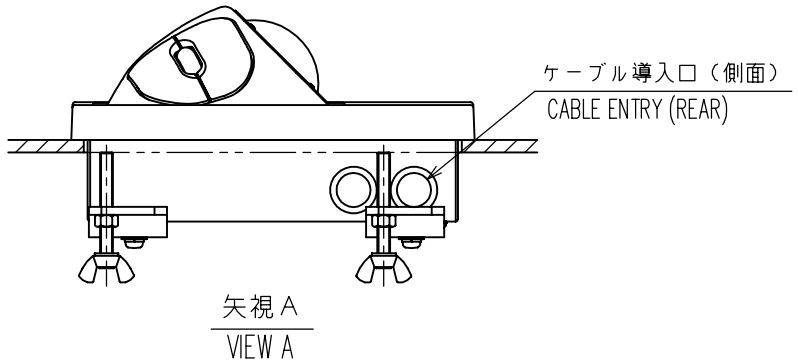

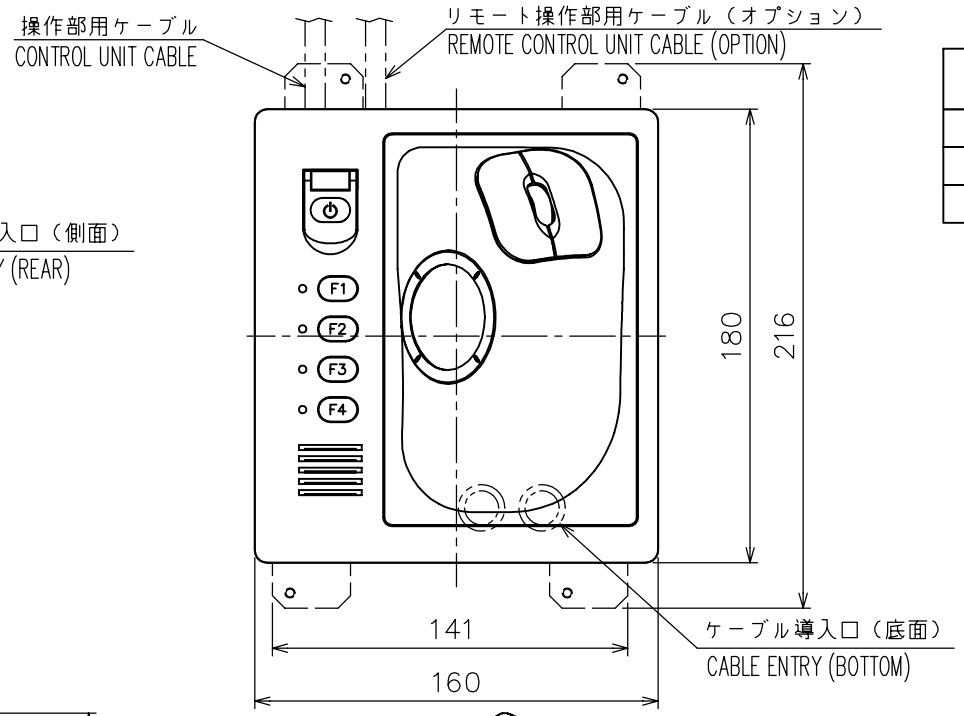

表1 TABLE 1

寸法区分（mm）DIMENSIONS	公差（mm）TOLERANCE
L≦50	±1.5
50<L≦100	±2.5
100<L≦500	±3

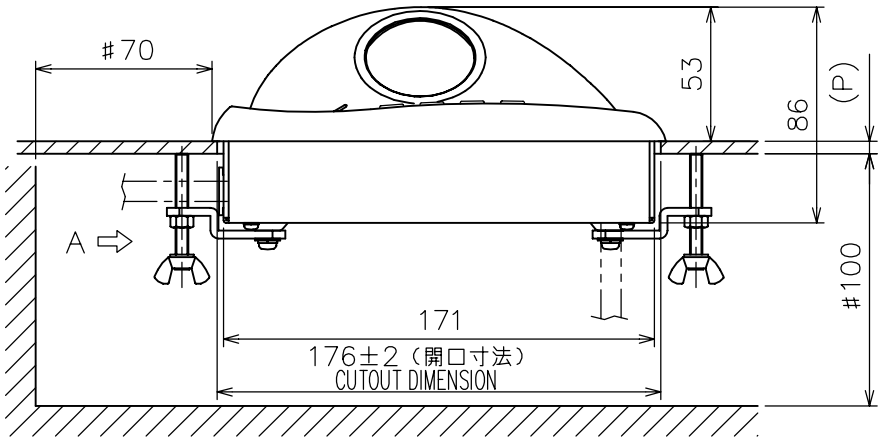

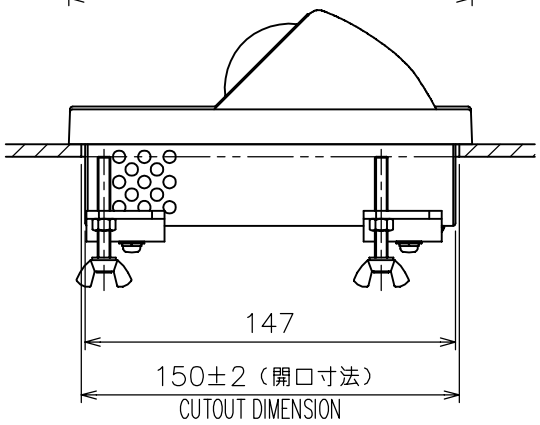

注　記

1）＃印寸法は最小サービス空間寸法とする。
2）指定外の寸法公差は表1による。
3）ケーブル導入口は側面・底面から選択のこと。
4）壁の厚さ（P）は最大10とする
5）質量はケーブル（10m）を含む

NOTE

1. #: MINIMUM SERVICE CLEARANCE.
2. TABLE 1 INDICATES TOLERANCE OF DIMENSIONS WHICH IS NOT SPECIFIED.
3. SELECT CABLE ENTRY FROM REAR OR SIDE.
4. THICKNESS (P) 10 MM MAX.
5. MASS INCLUDES CABLE (10M).

DRAWN Mar. 17 '04 E. MIYOSHI			TITLE RCU-015
CHECKED TAKAHASHI. T			名称 トラックボール操作部（埋込装備）
APPROVED Y. Hatai		FAR-2117 SER.	外寸図
SCALE 1/3	MASS 2.5 ±10% kg	質量は10mケーブル重さを含む。 MASS W/ 10m CABLE	NAME TRACKBALL CONTROL UNIT (FLUSH MOUNT)
DWG.No. C3519-G14- C		03-163-786G-2	OUTLINE DRAWING

FURUNO ELECTRIC CO., LTD.

FURUNO

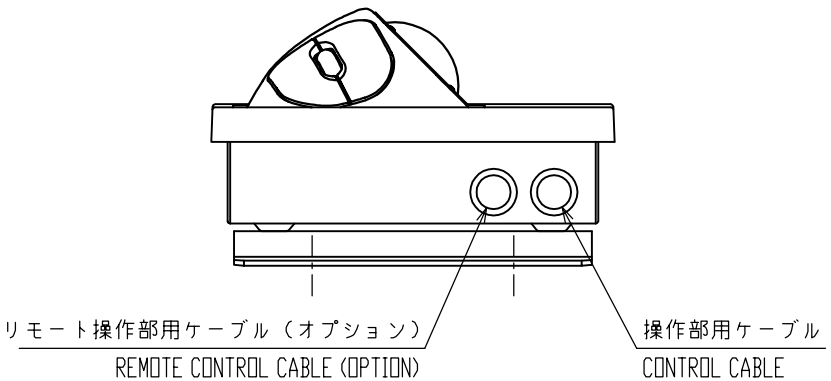

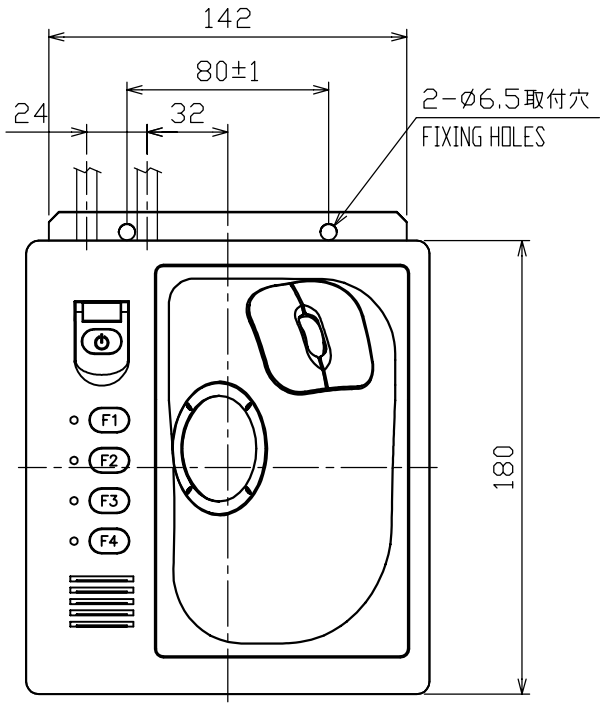

表１ TABLE 1

寸法区分（ｍｍ） DIMENSIONS	公差（ｍｍ） TOLERANCE
L≦50	±1.5
50<L≦100	±2.5
100<L≦500	±3

矢視D
VIEW D

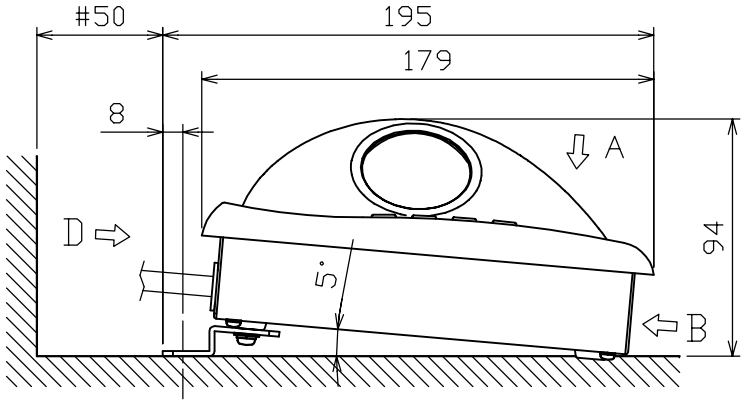

矢視A
VIEW A

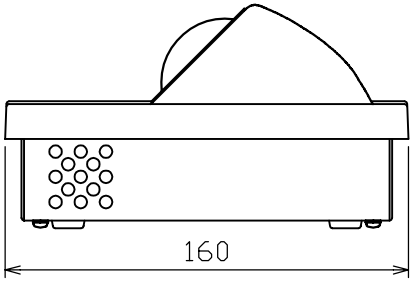

矢視B
VIEW B

注　記

１）＃印寸法は最小サービス空間寸法とする。
２）指定外の寸法公差は表１による。
３）取付にはトラスタッピンネジ呼び径６またはＭ６ボルトを使用のこと。
４）質量はケーブル（１０ｍ）を含む

NOTE

1. #: MINIMUM SERVICE CLEARANCE.
2. TABLE 1 INDICATES TOLERANCE OF DIMENSIONS WITCH IS NOT SPECIFIED.
3. USE TAPPING SCREWS φ6 OR M6 BOLTS FOR FIXING THE UNIT.
4. MASS IN CLUDES CABLE (10M).

DRAWN Jan. 7 '04 E. MIYOSHI			TITLE RCU-015
CHECKED Takahashi T.			名称 操作部（取付金具装備）
APPROVED Y. Hatai		FAR-2117 SER.	外寸図
SCALE 1/3	MASS 2.5 ±10% kg	質量は10mケーブル重さを含む。 MASS W/ 10m CABLE	NAME CONTROL UNIT (TABLETOP MOUNT W/ FIXTURE)
DWG.No. C3519-G15- B		03-163-787G-1	OUTLINE DRAWING

FURUNO ELECTRIC CO., LTD.

FURUNO

表１ TABLE 1

寸法区分（ｍｍ） DIMENSIONS	公差（ｍｍ） TOLERANCE
Ｌ≦５０	±１．５
５０<Ｌ≦１００	±２．５
１００<Ｌ≦５００	±３

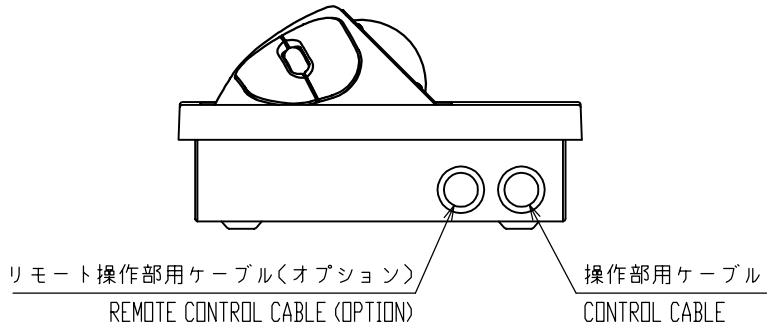

矢視A
VIEW A

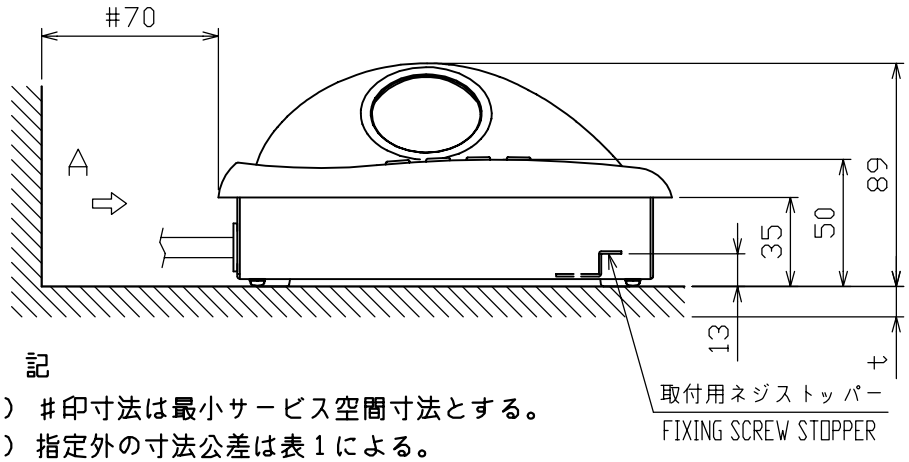

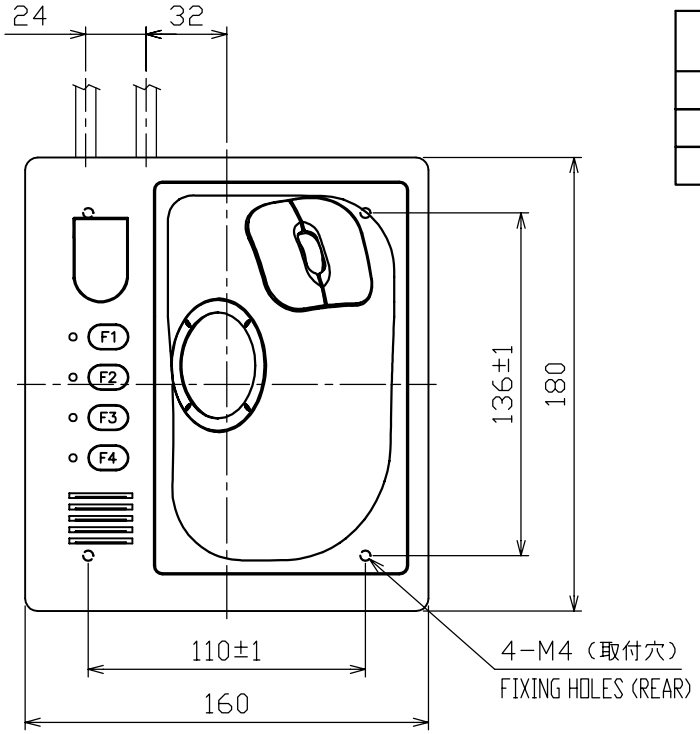

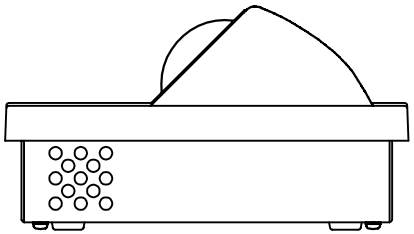

NOTE

1. #: MINIMUM SERVICE CLEARANCE.
2. TABLE 1 INDICATES TOLERANCE OF DIMENSIONS WHICH IS NOT SPECIFIED.
3. USE M4x12 SCREWS FOR FIXING. THICKNESS OF MOUNTING SURFACE SHOULD BE 2.5 CM. FOR GREATOR THICKNESS USE SCREW WHOSE LINGTH IS (M4X(t+7.8)) ±2.
4. MASS INCLUDES CABLE (10).

注　記

１）＃印寸法は最小サービス空間寸法とする。
２）指定外の寸法公差は表１による。
３）取付用ネジはセムスB（M４X１２）を使用のこと。
　　取付面板厚は最小２最大５とする。
　　それ以外はネジ長さ（M４X（ｔ＋７．８））±２
　　のセムスBを使用のこと。
４）質量はケーブル（１０m）を含む

DRAWN June. 19 '03 E. MIYOSHI		TITLE	RCU-016
CHECKED Takahashi T.		名称	操作部（卓上装備）
APPROVED Y. Hatai	FAR-2117 SER.		外寸図
SCALE 1/3 MASS 2.4 ±10% kg	質量は10mケーブル重さを含む。 MASS W/ 10m CABLE	NAME	CONTROL UNIT (DESKTOP MOUNT)
DWG.No. C3519-G16- B	03-163-780G-3		OUTLINE DRAWING

FURUNO ELECTRIC CO., LTD.

FURUNO

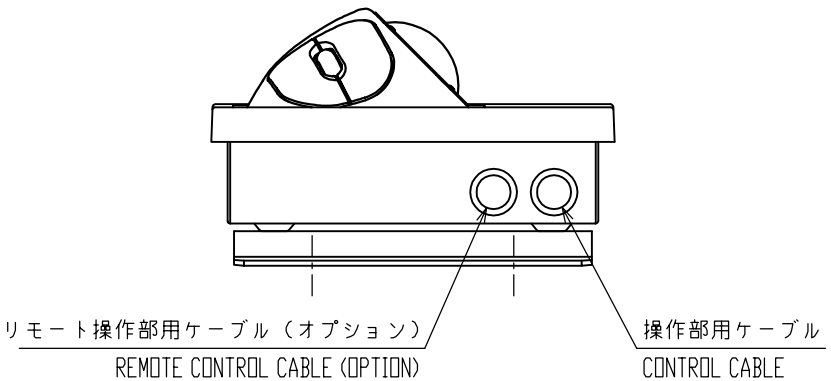

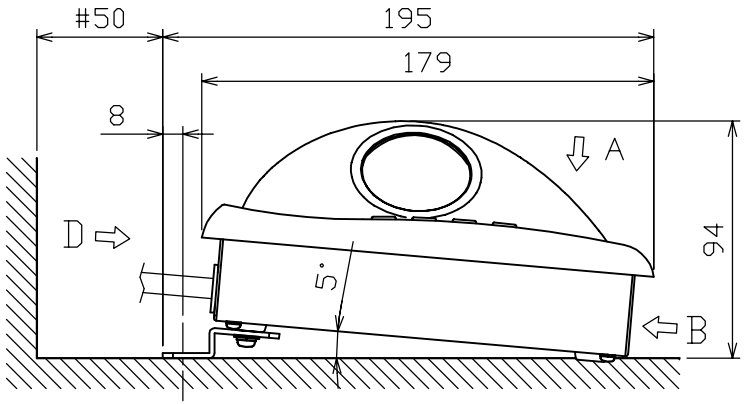

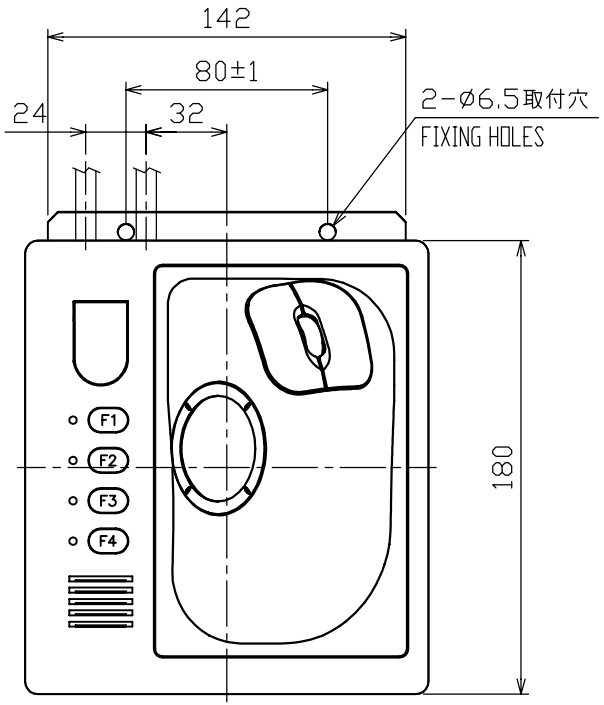

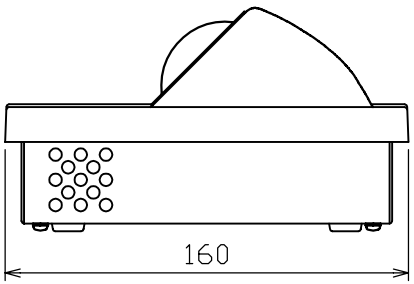

矢視B
VIEW B

表１ TABLE 1

寸法区分（ｍｍ）DIMENSIONS	公差（ｍｍ）TOLERANCE
L≦50	±1.5
50<L≦100	±2.5
100<L≦500	±3

注　記

１）＃印寸法は最小サービス空間寸法とする。
２）指定外の寸法公差は表１による。
３）取付用ネジはトラスタッピンネジ呼び径６、またはＭ６ボルトを使用のこと。
４）質量はケーブル（１０ｍ）を含む

NOTE

1. #: MINIMUM SERVICE CLEARANCE.
2. TABLE 1 INDICATES TOLERANCE OF DIMENSIONS. WHICH IS NOT SPECIFIED.
3. USE TAPPING SCREWS φ6 OR M6 BOLTS FOR FIXING THE UNIT.
4. MASS IN CLUDES CABLE (10M).

DRAWN Jan. 7 '04 E. MIYOSHI		TITLE	RCU-016
CHECKED Takahashi T.		名称	操作部（取付金具装備）
APPROVED Y. Hatai	FAR-2117 SER.		外寸図
SCALE 1/3 MASS 2.5 ±10% kg	質量は10mケーブル重さを含む。MASS W/ 10m CABLE	NAME	CONTROL UNIT (TABLETOP MOUNT W/ FIXTURE)
DWG.No. C3519-G12- B	03-163-782G-1		OUTLINE DRAWING

FURUNO

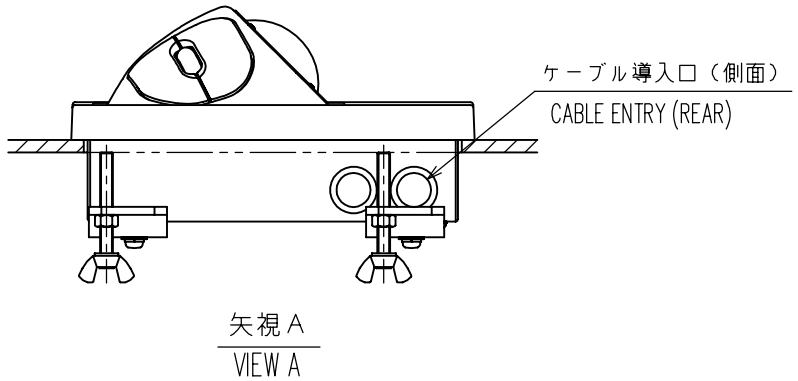

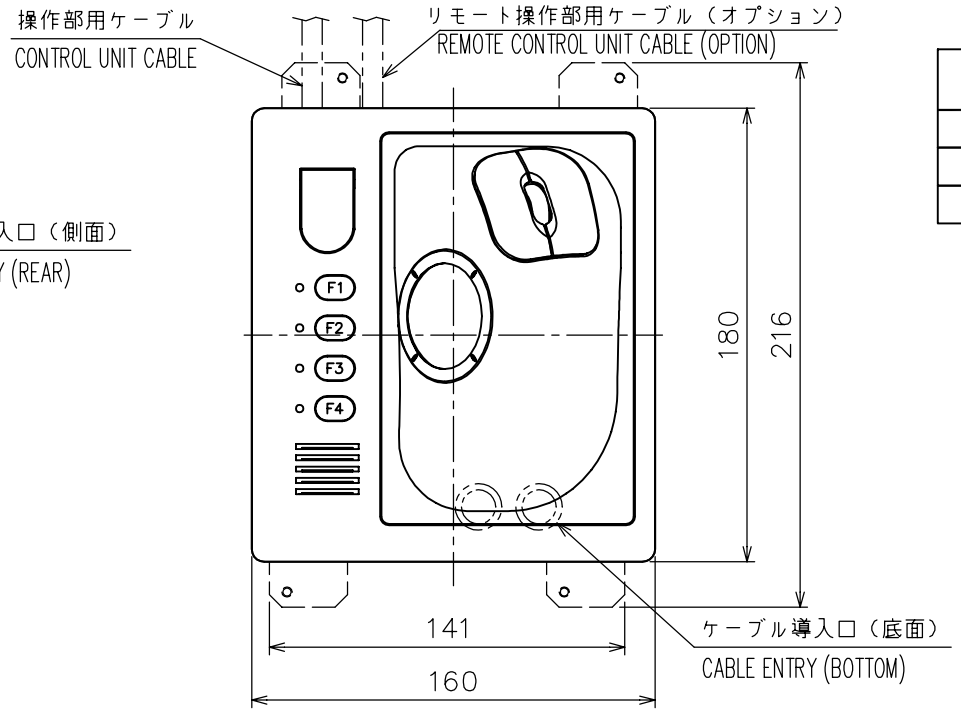

表1 TABLE 1

寸法区分（mm）DIMENSIONS	公差（mm）TOLERANCE
L≦50	±1.5
50<L≦100	±2.5
100<L≦500	±3

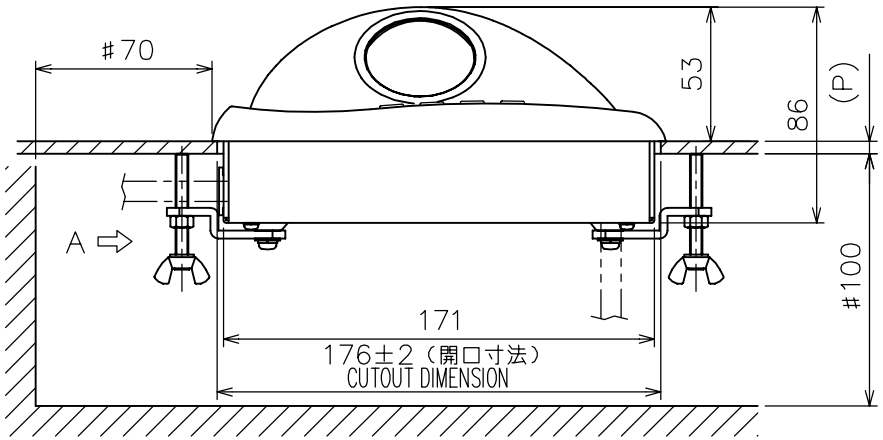

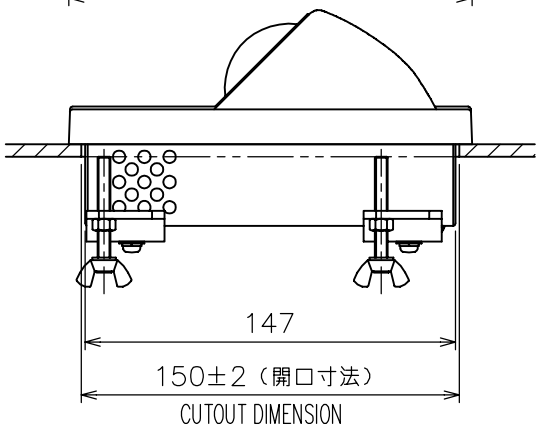

注　記

1）#印寸法は最小サービス空間寸法とする。
2）指定外の寸法公差は表1による。
3）ケーブル導入口は側面・底面から選択のこと。
4）壁の厚さ（P）は最大10とする
5）質量はケーブル（10m）を含む

NOTE

1. #: MINIMUM SERVICE CLEARANCE.
2. TABLE 1 INDICATES TOLERANCE OF DIMENSIONS. WHICH IS NOT SPECIFIED.
3. SELECT CABLE ENTRY FROM REAR OR SIDE.
4. THICKNESS (P) 10 MM MAX.
5. MASS INCLUDES CABLE (10M).

DRAWN Jan. 17 '04 E. MIYOSHI			TITLE RCU-016
CHECKED TAKAHASHI. T			名称 リモート操作部（埋込装備）
APPROVED Y. Hatai		FAR-2117 SER.	外寸図
SCALE 1/3	MASS 2.5 ±10% kg	質量は10mケーブル重さを含む。 MASS W/ 10m CABLE	NAME REMOTE CONTROL UNIT (FLUSH MOUNT)
DWG.No. C3519-G11- C		03-163-781G-3	OUTLINE DRAWING

FURUNO ELECTRIC CO., LTD.

FURUNO

表 1 TABLE 1

寸法区分（mm） DIMENSIONS	公差（mm） TOLERANCE
L≦50	±1.5
50<L≦100	±2.5
100<L≦500	±3

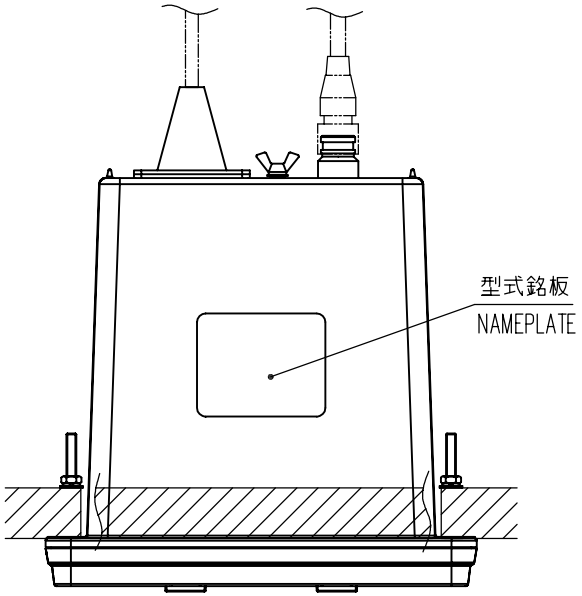

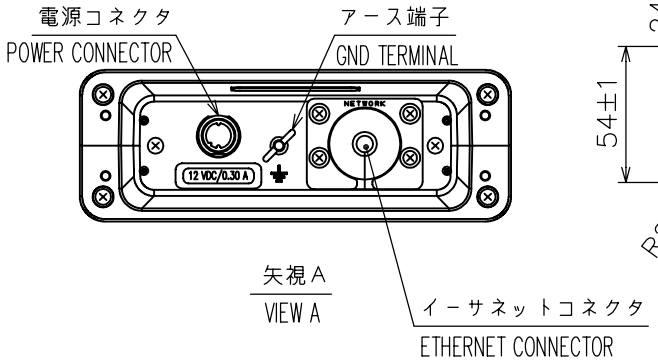

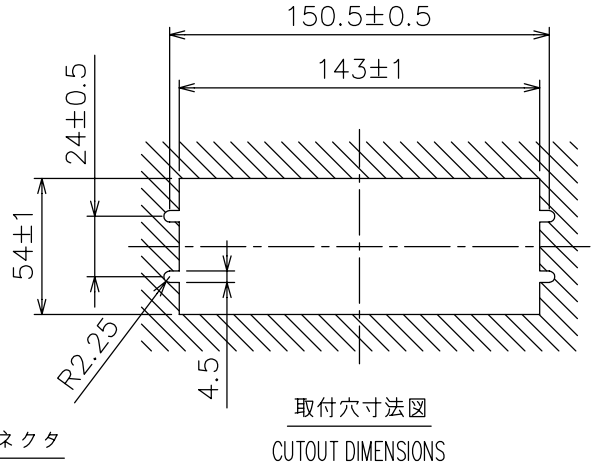

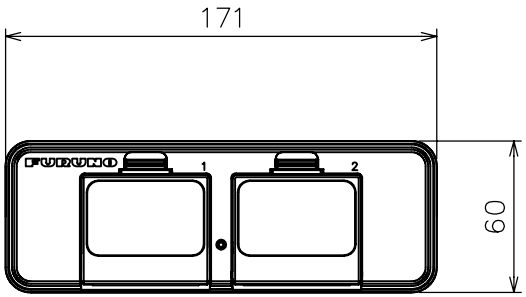

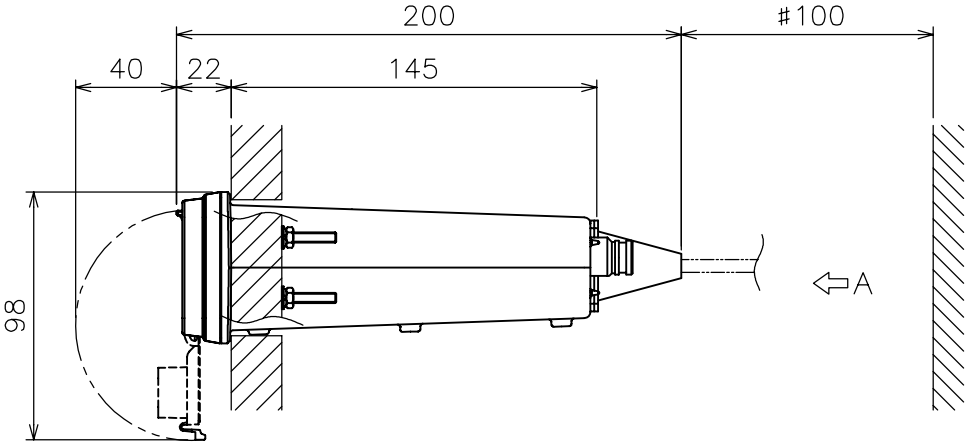

注　記　1）取付はＭ４Ｘ５０寸切りボルト、Ｍ４平座金、
　　Ｍ４バネ座金、Ｍ４ナット使用のこと。
　　２）＃印寸法は最小サービス空間寸法とする。
　　３）指定外の寸法公差は表１による。

NOTE 1. USE M4X50 BOLTS, M4 FLAT WASHERS,
M4 SPRING WASHERG AND M4 NUTS FOR FIXING.
2. #: MINIMUM SERVICE CLEARANCE.
3. TABLE 1 INDICATES TOLERANCE OF DIMENSIONS WHICH IS NOT SPECIFIED.

DRAWN Mar. 29 '04 E. MIYOSHI	FAR-2117 SERIES	TITLE	CU-200
CHECKED TAKAHASHI. T	MODEL 1833C	名称	防水型カードインターフェイス(埋込装備)
APPROVED Y. Hatai	MODEL 1833C-BB		外寸図
SCALE 1/3 MASS 0.8 ±10% kg		NAME	MEMORY CARD INTERFACE UNIT (FLUSH MOUNT)
DWG.No. C3532-G04- B	19-023-300G-1		OUTLINE DRAWING

FURUNO ELECTRIC CO., LTD.

FURUNO

表 1 TABLE 1

寸法区分（mm） DIMENSIONS	公差（mm） TOLERANCE
L≦50	±1.5
50<L≦100	±2.5
100<L≦500	±3

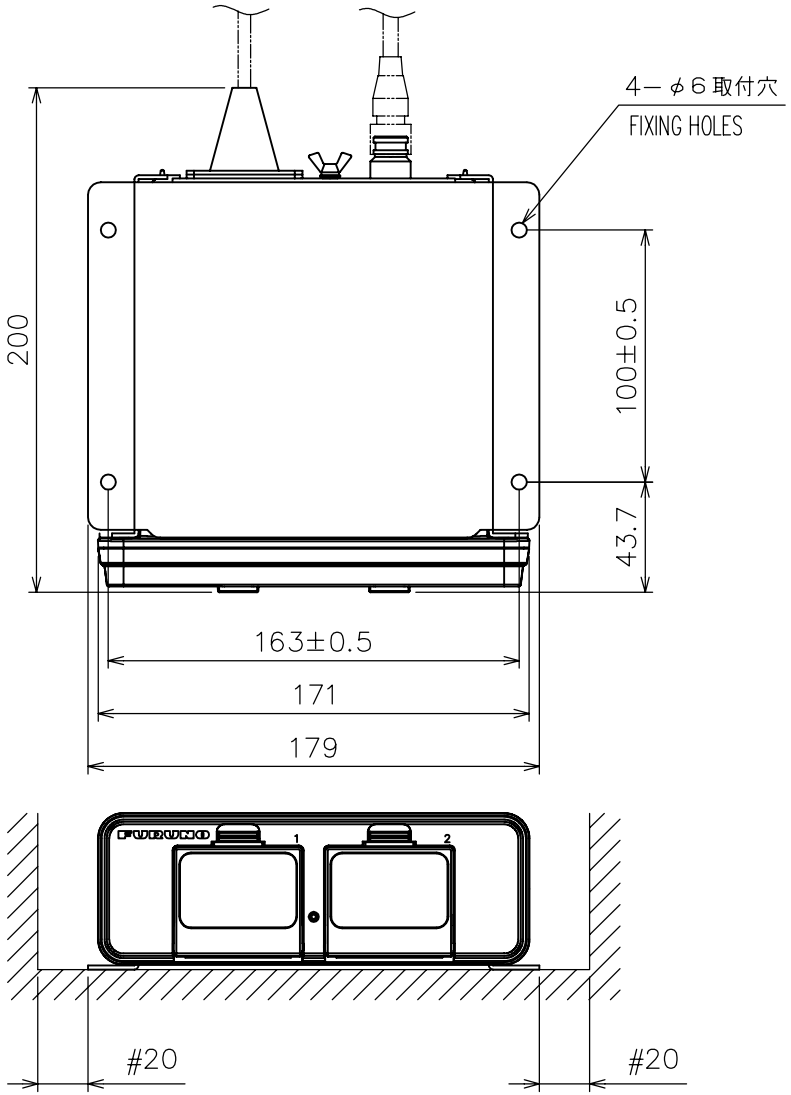

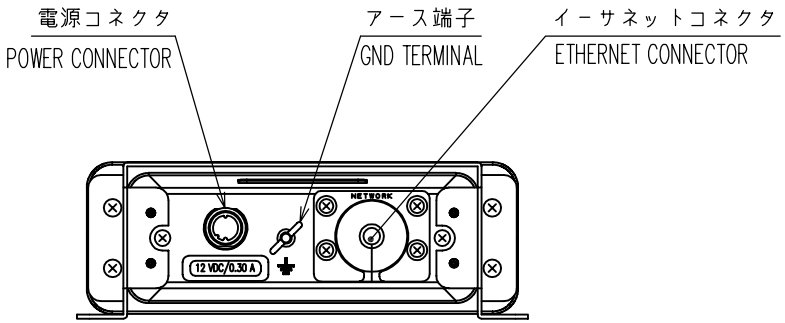

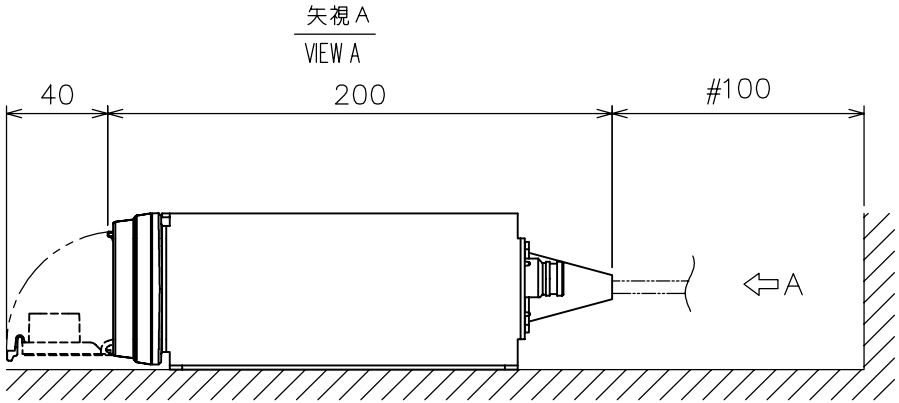

注　記　1）　#印寸法は最小サービス空間寸法とする。
2）　指定外の寸法公差は表１による。
3）　取付用ネジは＋トラスタッピンネジ呼び径５×２０を使用のこと。

NOTE　1.　#: MINIMUM SERVICE CLEARANCE.
2.　TABLE 1 INDICATES TOLERANCE OF DIMENSIONS WHICH IS NOT SPECIFIED.
3.　USE SELF-TAPPING SCREWS 5X20 FOR FIXING THE UNIT.

DRAWN Mar. 29.'04 F. MIYOSHI	FAR-2117 SERIES		TITLE CU-200
CHECKED TAKAHASHI. T	MODEL 1833C		名称 防水型カードインターフェイス(卓上装備)
APPROVED Y. Hatai	MODEL 1833C-BB		外寸図
SCALE 1/3 MASS 1.3 ±10% kg			NAME MEMORY CARD INTERFACE UNIT (TABLETOP MOUNT)
DWG.No. C3532-G05- B	19-023-310G-1		OUTLINE DRAWING

FURUNO ELECTRIC CO., LTD.

FURUNO

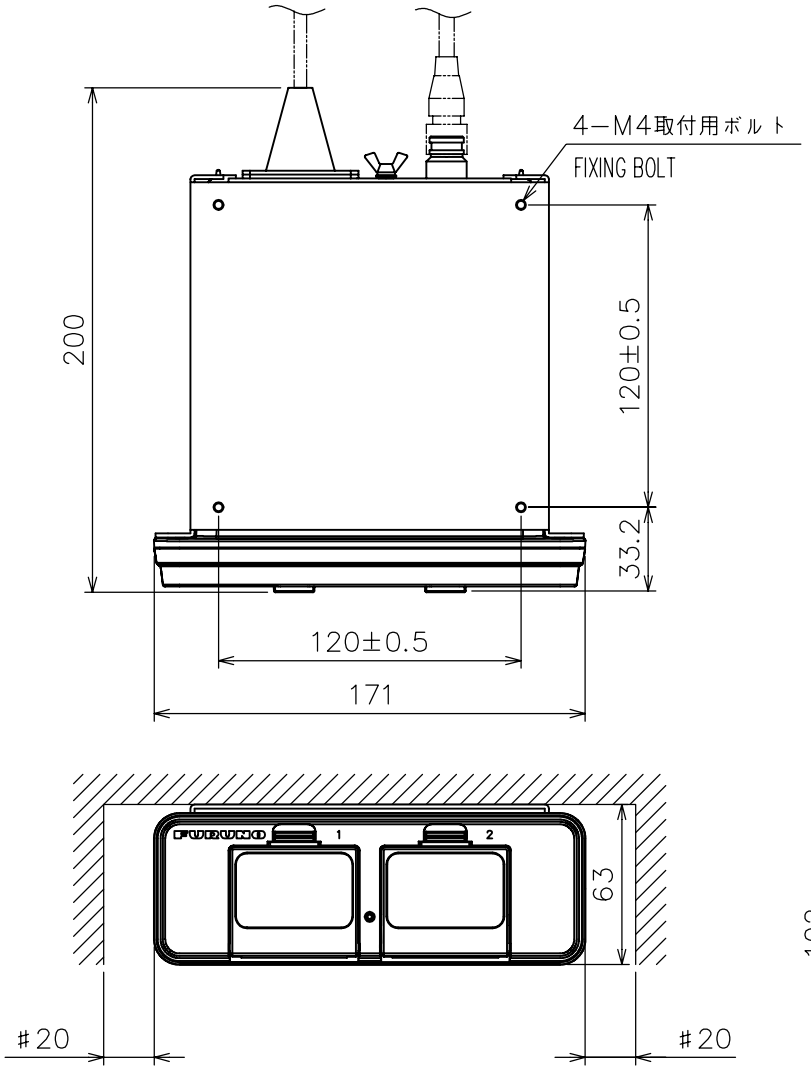

注　記

1）　#印寸法は最小サービス空間寸法とする。
2）　指定外の寸法公差は表１による。
3）　取付用ナットはM４ナットを使用のこと。
4）　取付板厚は最大８ｍｍとする。

NOTE

1. #: MINIMUM SERVICE CLEARANCE.
2. TABLE 1 INDICATES TOLERANCE OF DIMENSIONS WHICH IS NOT SPECIFIED.
3. USE NUT M4 FOR FIXING THE UNIT.
4. MAX. MOUNTING BASE THICKNESS IS 8 MM.

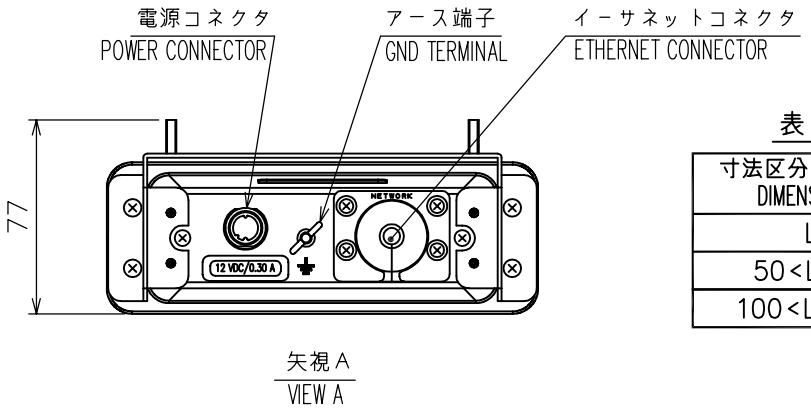

表 1 TABLE 1

寸法区分（mm） DIMENSIONS	公差（mm） TOLERANCE
L≦50	±1.5
50<L≦100	±2.5
100<L≦500	±3

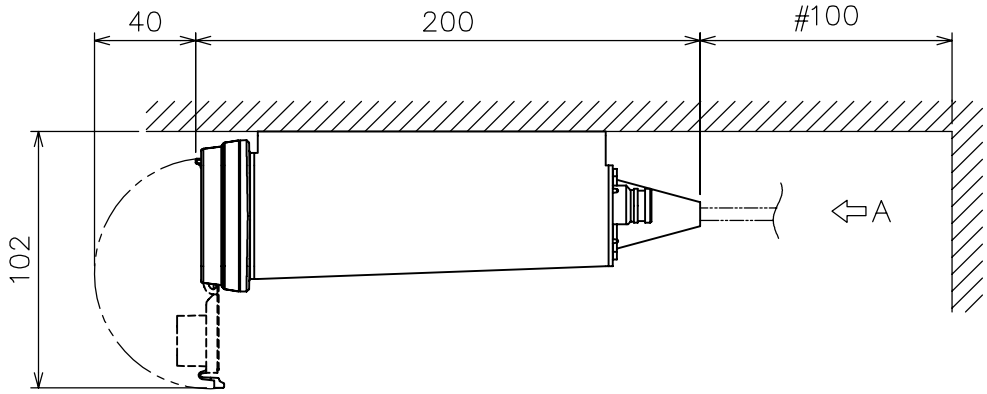

DRAWN Mar. 29.'04 F. MIYOSHI	FAR-2117 SERIES	TITLE	CU-200
CHECKED TAKAHASHI. T	MODEL 1833C	名称	防水型カードインターフェイス(天井装備)
APPROVED Y. Hatai	MODEL 1833C-BB		外寸図
SCALE 1/3 MASS 1.3 ±10% kg		NAME	MEMORY CARD INTERFACE UNIT (OVERHEAD MOUNT)
DWG.No. C3532-G06- B	19-023-320G-1		OUTLINE DRAWING

FURUNO ELECTRIC CO., LTD.

FURUNO

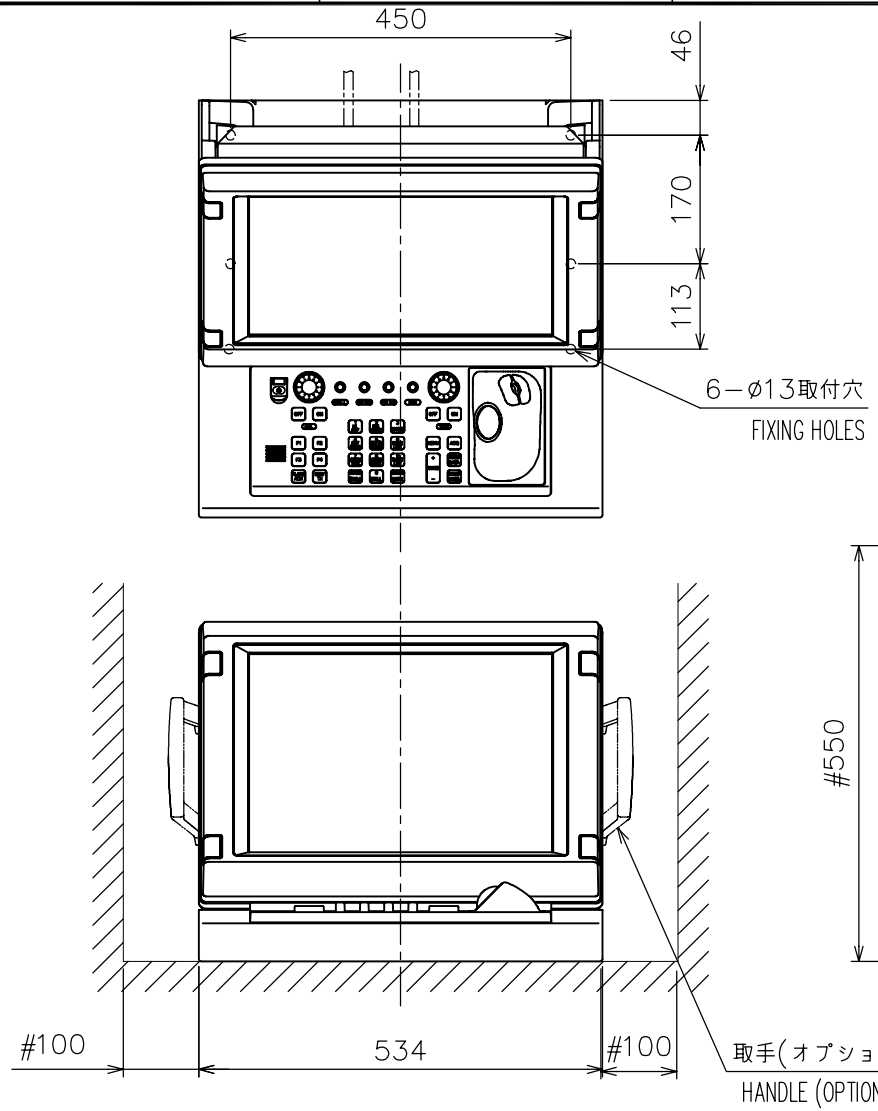

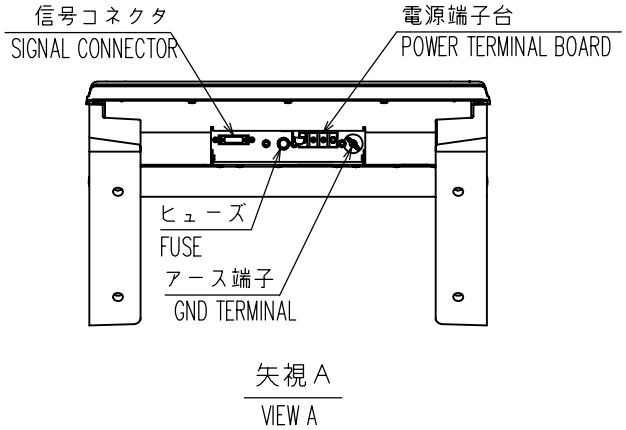

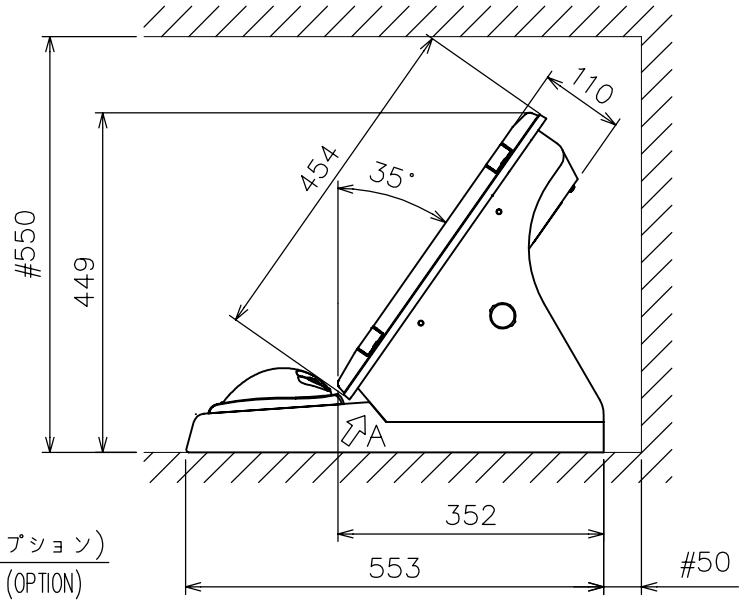

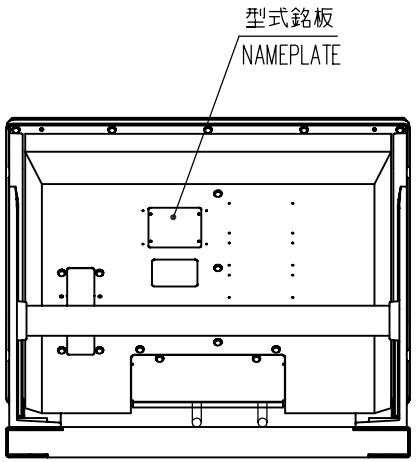

表 1 TABLE 1

寸法区分（mm） DIMENSIONS (mm)	公差（mm） TOLERANCE (mm)
L≦50	±1.5
50<L≦100	±2.5
100<L≦500	±3
500<L≦1000	±4

注　記　1）　#印寸法は最小サービス空間寸法とする。
　　2）　指定外の寸法公差は表1による。
　　3）　取付用ネジはM10ボルト、またはコーチボルト呼び径9を使用のこと。
　　4）　質量は操作部ケーブル（10m）を含む。

NOTE
1. #: MINIMUM SERVICE CLEARANCE.
2. TABLE 1 INDICATES TOLERANCE OF DIMENSIONS WHICH IS NOT SPECIFIED.
3. USE M10 BOLTS OR COACH SCREWS ø9 FOR FIXING THE UNIT.
4. MASS INCLUDES CONTROL CABLE (10m).

DRAWN Mar. 18 '04 E. MIYOSHI			TITLE MU-201CR w/ RCU-014
CHECKED TAKAHASHI. T			名称 指示部（連結台タイプ）
APPROVED Y. Hatai	FAR-2107		外寸図
SCALE 1/10 MASS 27 ±10% kg			NAME DISPLAY UNIT (COMBINATION TYPE)
DWG No. C3519-G27-A	03-163-760G-2		OUTLINE DRAWING

FURUNO ELECTRIC CO., LTD.

FURUNO

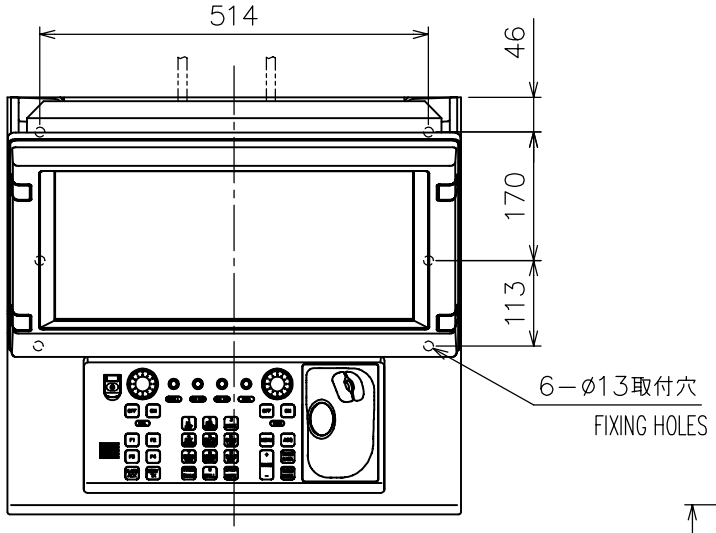

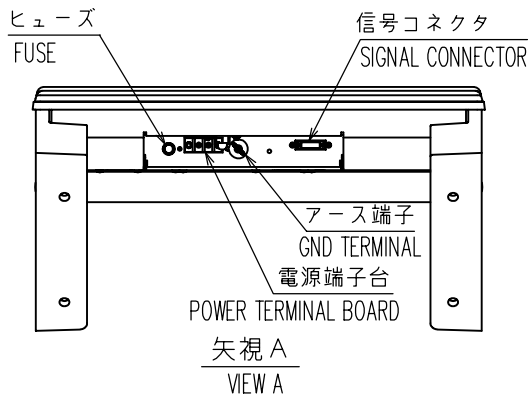

表 1 TABLE 1

寸法区分（mm） DIMENSIONS (mm)	公差（mm） TOLERANCE (mm)
L≦50	±1.5
50<L≦100	±2.5
100<L≦500	±3
500<L≦1000	±4

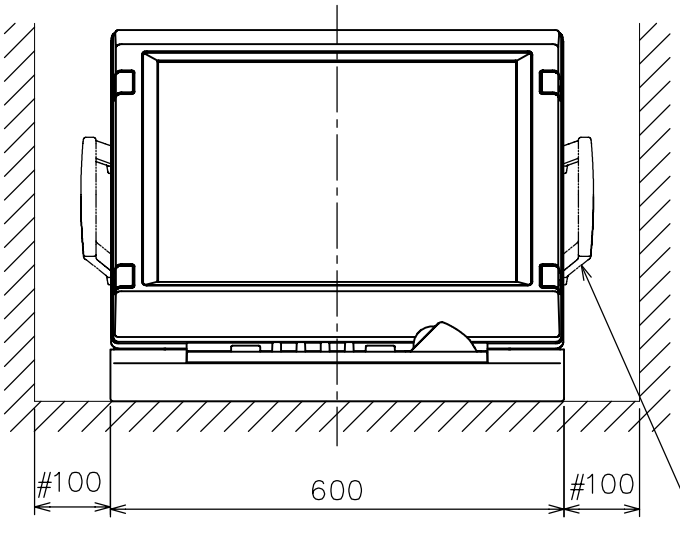

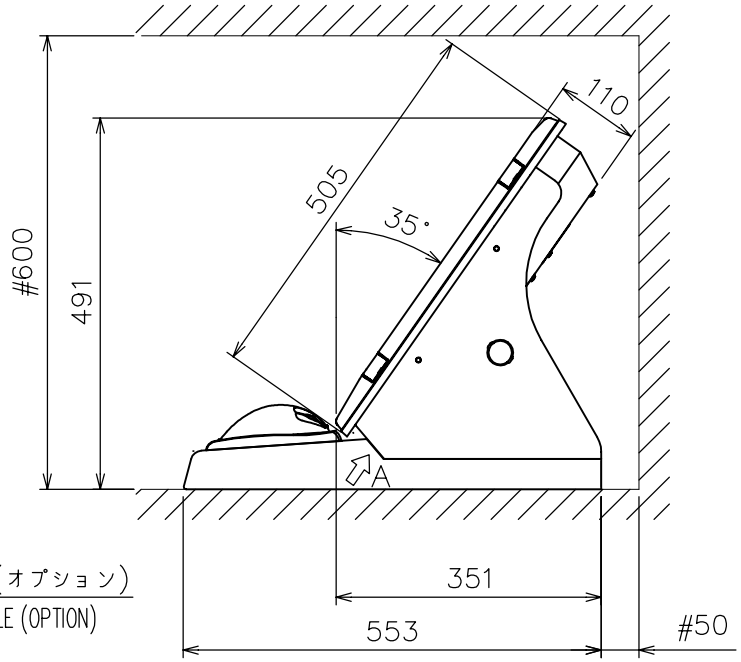

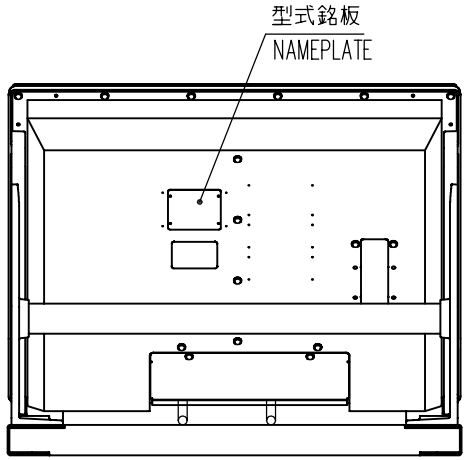

注 記
1） #印寸法は最小サービス空間寸法とする。
2） 指定外の寸法公差は表1による。
3） 取付用ネジはM10ボルト、またはコーチボルト呼び径9を使用のこと。
4） 質量は操作部ケーブル（10m）を含む。

NOTE
1. #: MINIMUM SERVICE CLEARANCE.
2. TABLE 1 INDICATES TOLERANCE OF DIMENSIONS WHICH IS NOT SPECIFIED.
3. USE M10 BOLTS OR COACH SCREWS ø9 FOR FIXING THE UNIT.
4. MASS INCLUDES CONTROL CABLE (10m).

DRAWN Mar. 18 '04 E. MIYOSHI			TITLE MU-231CR w/ RCU-014
CHECKED TAKAHASHI. T			名称 指示部（連結台タイプ）
APPROVED Y. Hatai	FAR-2807		外寸図
SCALE 1/10 MASS 33 ±10% kg			NAME DISPLAY UNIT (COMBINATION TYPE)
DWG No. C3524-G07- A	03-163-761G-2		OUTLINE DRAWING

FURUNO ELECTRIC CO., LTD.

FURUNO

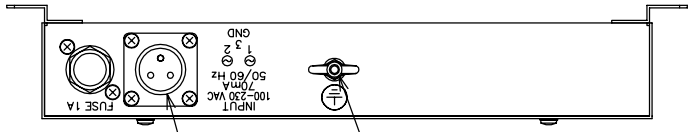

表１ TABLE 1

寸法区分（ｍｍ） DIMENSIONS	公差（ｍｍ） TOLERANCE
Ｌ≦５０	±１．５
５０＜Ｌ≦１００	±２．５
１００＜Ｌ≦５００	±３

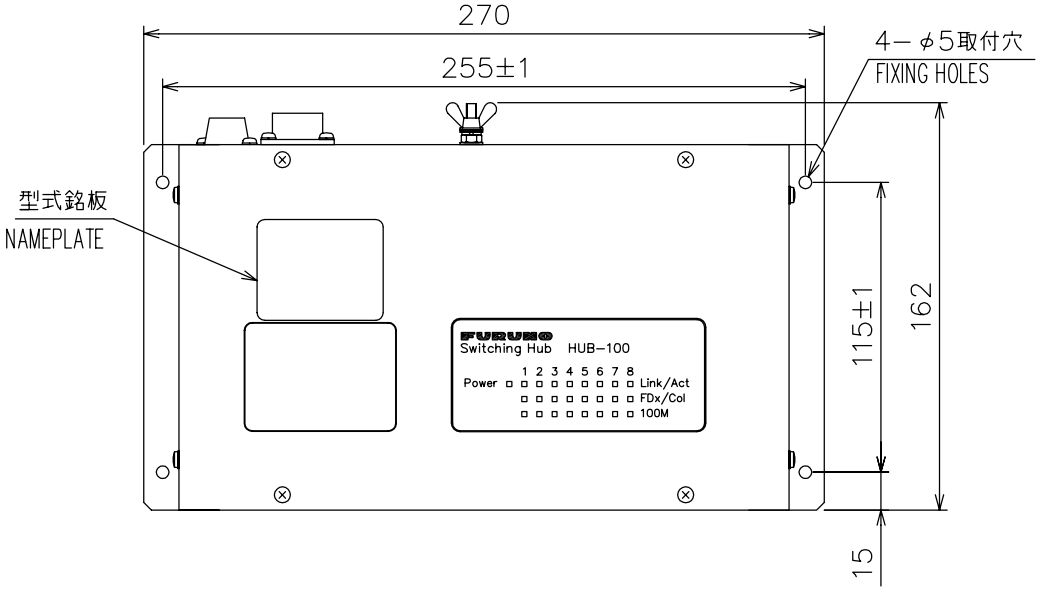

注　記

１）　取付用ネジはトラスタッピングネジ呼び径４×１６を使用のこと

２）　指定外寸法公差は表１による

３）　＃印寸法は最小サービス空間寸法とする

NOTE

1. USE TAPPING SCREWS 4x16 FOR FIXING THE UNIT.
2. TABLE 1 INDICATES TOLERANCE OF DIMENSIONS WHICH IS NOT SPECIFIED.
3. #: MINIMUM SERVICE CLEARANCE.

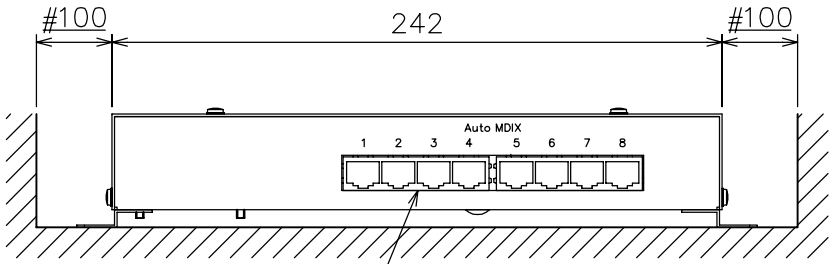

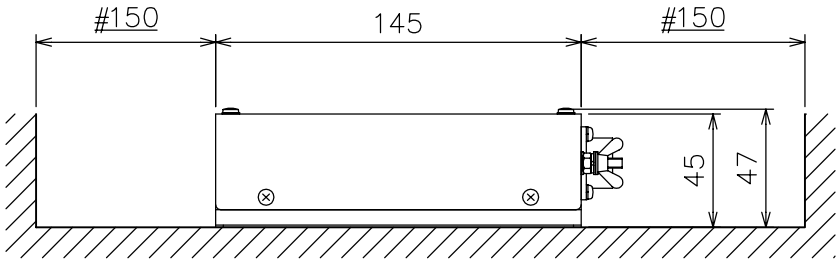

DRAWN Mar. 31 '04 T.YAMASAKI			TITLE HUB-100
CHECKED Mar. 31 '04 T.MATSUGUCHI			名称 イーサネットスイッチングハブ
APPROVED Apr.05'04 T. Matsuguchi			外寸図
SCALE 1/3	MASS 1.5 ±10% kg		NAME SWITCHING HUB
DWG.No. C3519-G18- B		03-163-960G-2	OUTLINE DRAWING

FURUNO ELECTRIC CO., LTD.

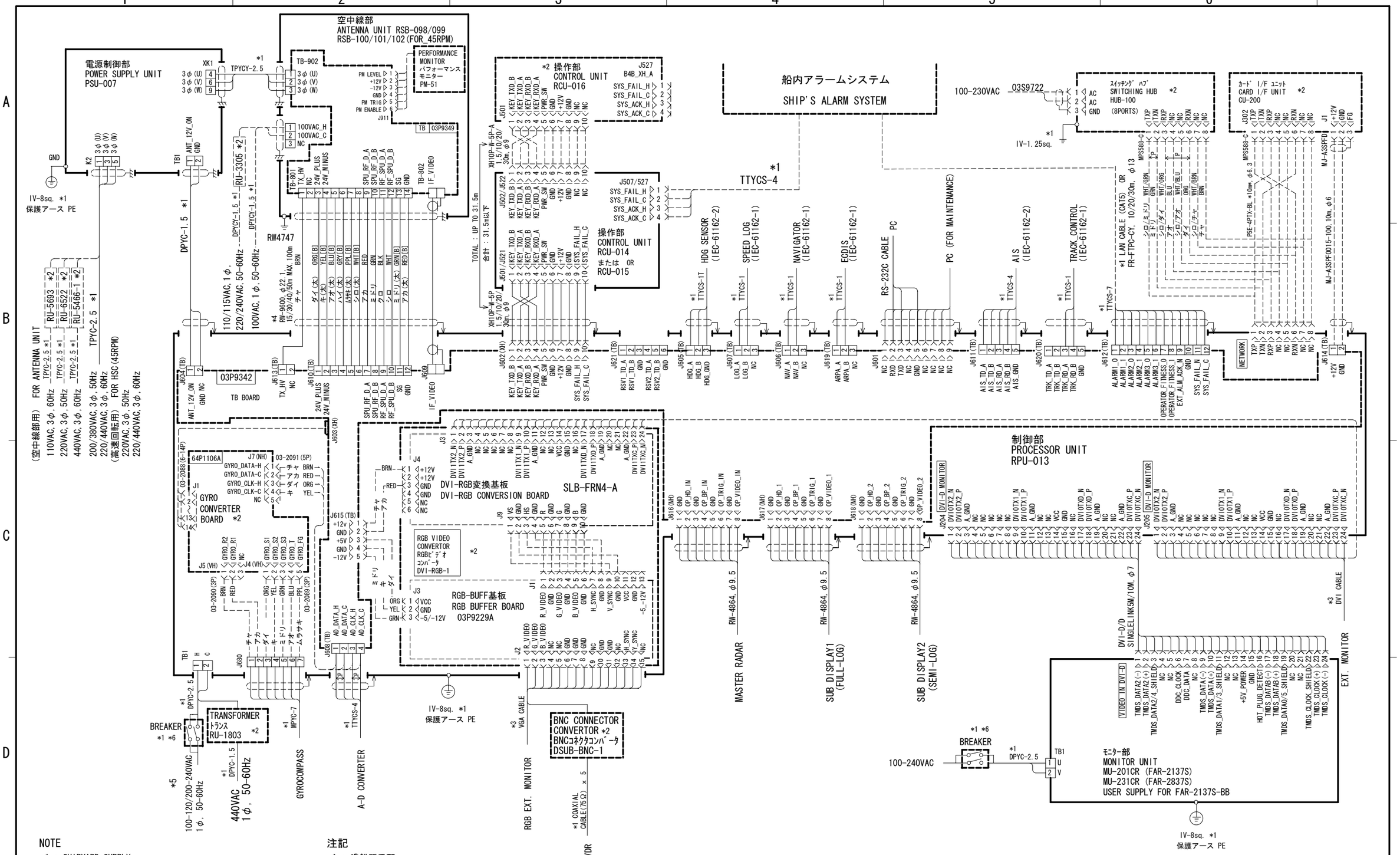

NOTE

*1 : SHIPYARD SUPPLY
*2 : OPTION
*3 : USER SUPPLY
*4 : MAX. 100m (OVER 100m : REQUIRED RJB-001)
*5 : IF ONE LINE OF AC IS GROUNDED, CONNECT IT TO "C" (COMMON) TERMINAL AND THE OTHER LINE TO "H" (HOT).
*6 : PASS THE AC LINE THROUGH A DOUBLE-CONTACT BREAKER (SHIPYARD SUPPLY)

注記

*1 : 造船所手配
*2 : オプション
*3 : ユーザー手配
*4 : 最長 100m (100mを超える場合はRJB-001が必要)
*5 : 交流電源の片方がアースに落ちている場合は、そのラインをC（コモン）端子に接続し、他方はH(ホット)端子に接続します。
*6 : 交流は両極切りブレーカ（造船所手配）を経由すること

DRAWN Jun. 9 '04 K.MIYAZAWA			TYPE FAR-2137S/2837S/2837S-BB
CHECKED TAKAHASHI.T			名 称 船舶用レーダー/ARPA
APPROVED Y. Hatai			相互結線図
SCALE	MASS kg		NAME MARINE RADAR/ARPA
DWG.No. C3521-C01- C		03-163-6002-1	INTERCONNECTION DIAGRAM