FURUNO

INSTALLATION MANUAL

MARINE RADAR

MODEL FR-7062

FURUNO ELECTRIC CO., LTD.
NISHINOMIYA, JAPAN

© FURUNO ELECTRIC CO., LTD.

9-52, Ashihara-cho,
Nishinomiya, Japan

Telephone: 0798-65-2111
Telefax: 0798-65-4200

•Your Local Agent/Dealer

All rights reserved. Printed in Japan

FIRST EDITION : APR. 1998
H : JUN. 6, 2001

PUB. No. IME-34590-H
FR-7062
(HIMA)

* 00080820000 *

SAFETY INSTRUCTIONS

WARNING

ELECTRICAL SHOCK HAZARD

Do not open the equipment unless totally familiar with electrical circuits and service manual.

Only qualified personnel should work inside the equipment.

Wear a safety belt and hard hat when working on the scanner unit.

Serious injury or death can result if someone falls from the radar scanner mast.

Construct a suitable service platform from which to install the scanner unit.

Serious injury or death can result if someone falls from the radar scanner mast.

Turn off the power at the mains switchboard before beginning the installation.

Fire, electrical shock or serious injury can result if the power is left on or is applied while the equipment is being installed.

Do not install the display unit where it may get wet from rain or water splash.

Water in the display unit can result in fire, electrical shock or equipment damage.

WARNING

Radio Frequency Radiation Hazard

The radar scanner emits electromagnetic radio frequency (RF) energy which can be harmful, particularly to your eyes. Never look directly into the scanner aperture from a close distance while the radar is in operation or expose yourself to the transmitting scanner at a close distance.

Distances at which RF radiation levels of 100 and 10 W/m^2 exist are given in the table below.

Note: If the scanner unit is installed at a close distance in front of the wheel house, your administration may require halt of transmission within a certain sector of scanner revolution. This is possible — Ask your FURUNO representative or dealer to provide this feature.

Radiator type	Distance to 100 W/m^2 point	Distance to 10 W/m^2 point
XN12A (4')	Nil	Worst case 2.5 m
XN13A (6')		Worst case 2.3 m

⚠ WARNING

Be sure that the power supply is compatible with the voltage rating of the equipment.

Connection of an incorrect power supply can cause fire or equipment damage. The voltage rating of the equipment appears on the label above the power connector.

Use only the specified power cable.

Fire or equipment damage can result if a different cable is used.

⚠ CAUTION

Ground the equipment to prevent electrical shock and mutual interference.

Observe the following compass safe distances to prevent deviation of a magnetic compass:

	Standard	Steering
Display unit	1.10 m	0.80 m
Scanner unit	1.65 m	1.25 m

HIGH TENSION WARNING

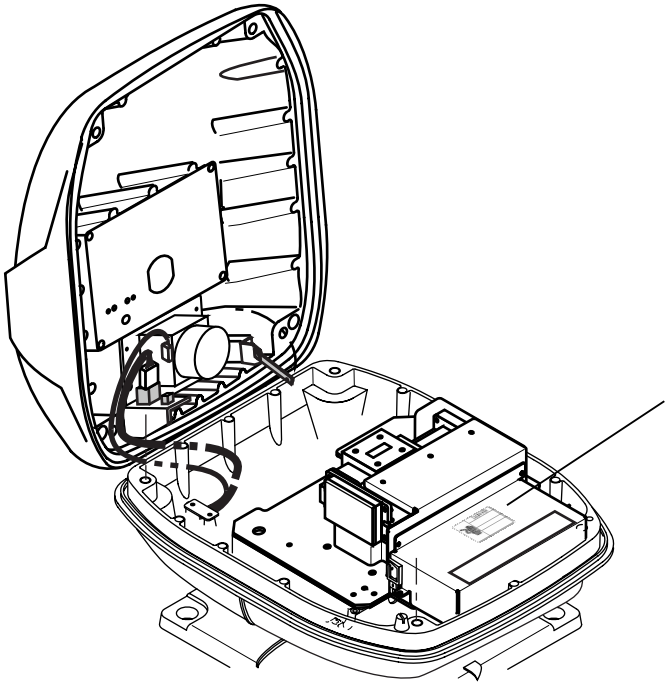

Name: Warning Label (1)
Type: 86-003-1011
Code No.: 100-236-230

TABLE OF CONTENTS

EQUIPMENT LISTS iv
SYSTEM CONFIGURATION vi

SCANNER UNIT

Mounting Considerations, Precautions 1
Mounting Methods 1
Fixing Holes in Mounting Platform 1
Fastening the Radiator to the Radiator Bracket 2
Mounting the Scanner Unit 2
Connecting the Signal Cable 4

DISPLAY UNIT

Mounting Considerations 6
Tabletop Mounting 6
Bulkhead, Overhead Mounting 7

WIRING 8

ADJUSTMENTS, INITIAL SETTINGS

Adjustments, Initial Settings
1. Displaying the Installation Setup menu 9
2. Selecting a navaid 9
3. Selecting a heading sensor 9
4. Adjusting tuning, video amplifier input level 9
5. Aligning heading 10
6. Adjusting sweep timing 10
7. Adjusting MBS (Main Bang Suppression) 11
8. Entering scanner height 11
9. Selecting STC curve 11
10. Setting a dead sector 12
11. Checking magnetron heater voltage 12

ARP-10 INSTALLATION

Necessary Parts 13
Installation 13
Adjustments 14

INSTALLATION MATERIALS, ACCESSORIES, SPARE PARTS A-1
OUTLINE DRAWINGS D-1
SCHEMATIC DIAGRAMS S-1

EQUIPMENT LISTS

Standard Supply

Name	Type	Code No.	Qty	Remarks	
Scanner Unit	XN12A-RSB-0070-059	-	1	24 rpm, 1250 mm	
	XN12A-RSB-0070-059	-		24 rpm, 1800 mm	
	XN12A-RSB-0070-059	-		48 rpm, 1250 mm	
Display Unit	RDP-122	-	1		
Spare Parts	SP03-10200	000-085-692	1	See packing list	
Installation Materials	CP03-18400	000-086-892	1	CP03-18401, Power cable, 10 m signal cable	See packing lists
	CP03-18410	000-086-893		CP03-18401, Power cable, 15 m signal cable	
	CP03-18420	000-086-894		CP03-18401, Power cable, 20 m signal cable	
	CP03-18430	000-086-895		CP03-18401, Power cable, 30 m signal cable	
Spare Parts	FP03-05310	000-085-757	1	FP03-02910	
				FP03-04310	
				FP03-02920	

Optional Supply

Name	Type	Code No.	Remarks
External Buzzer	OP03-21	000-030-097	
Rectifier	RU-3423	000-030-443	
Cable Assy.	MJ-A6SPF0007-100	000-125-237	For heading sensor, 10 m w/6P connector at both ends, straight
	MJ-A6SPF0012-050	000-134-424	For navaid, video sounder, 5 m w/6P connector at both ends, cross
	MJ-A6SPF0012-100	000-133-817	For navaid, video sounder, 10 m w/6P connector at both ends, cross
	MJ-A6SPF0009-100	000-125-236	For navaid, video sounder, heading sensor, 10 m w/6P connector at one end
Signal Cable	MJ-A6SPF0003-050	000-117-603	5 m, w/6P connector on one end
EMI Filter	FP03-05500	008-456-990	
Dust Cover	03-038-9001	000-801-826	
Hood w/Lens	OP03-120	008-441-880	
Filter	FP03-02920	008-224-760	
Auto Plotter	ARP-10	000-086-852	Useable with 24 rpm scanner unit
Radar Plotter	RP-110	-	
Slave Display	FMD-811	-	LCD
	FMD-8010	-	
Remote Display	FMD-1800	-	w/CVD Converter
Cable Assy.	MJ-B24LPF0006-005	000-140-438	Cable converter connector

SYSTEM CONFIGURATION

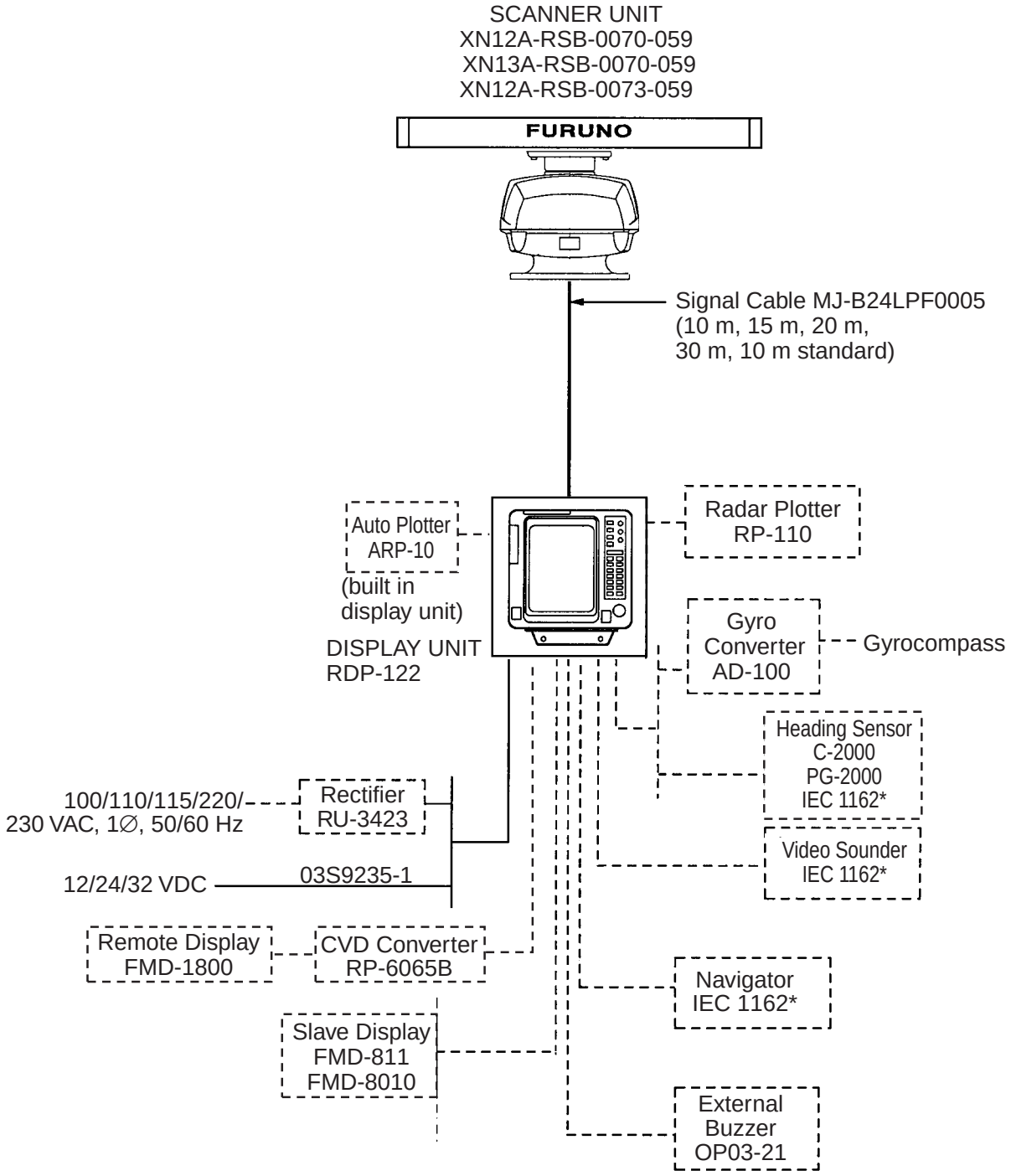

Broken lines denote optional equipment.
** Equivalent to NMEA 0183*

SCANNER UNIT

Mounting Considerations, Precautions

- The scanner unit is generally installed either on top of the wheelhouse or on the radar mast on a suitable platform. Locate the scanner unit where there is a good all-round view. Any obstruction will cause shadow and blind sectors. A mast for instance, with a diameter considerably less than the width of the radiator, will cause only a small blind sector, but a horizontal spreader or crosstrees in the same horizontal plane as the scanner unit would be a much more serious obstruction; you would need to place the scanner unit well above or below it.
- It is rarely possible to place the scanner unit where a completely clear view in all directions is available. Thus, you should determine the angular width and relative bearing of any shadow sectors for their influence on the radar at the first opportunity after fitting.
- If you have a radio direction finder on your boat, locate its scanner clear of the scanner unit to prevent interference to the direction finder. A separation of more than two meters is recommended.
- To lessen the chance of picking up electrical interference, avoid where possible routing the signal cable near other onboard electrical equipment. Also avoid running the cable in parallel with power cables.
- A magnetic compass will be affected if placed too close to the scanner unit. Observe the following compass safe distances to prevent deviation of a magnetic compass: Standard compass, 1.00 m, Steering compass, 0.75 m.
- Do not paint the radiator aperture, to ensure proper emission of the radar waves.
- When this radar is to be installed on larger vessels, consider the following points:
  - The signal cable run between the scanner and the display comes in lengths of 10 m (standard), 15 m, 20 m and 30 m. Whatever length is used it must be unbroken; namely, no splicing allowed.
  - Deposits and fumes from a funnel or other exhaust vent can adversely affect the aerial performance and hot gases may distort the radiator portion. The scanner unit must not be mounted where the temperature is more than 70°C.

Mounting Methods

As shown in the figure below, the scanner unit may be installed on the bridge, on a common mast or on a dedicated mast.

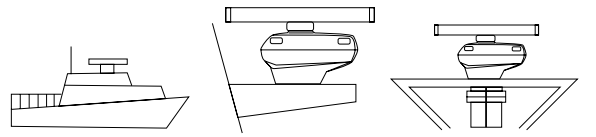

Figure 1 Scanner unit mounting methods

Fixing Holes in Mounting Platform

Referring to the outline drawing on page D-1, drill five holes in the mounting platform: four holes of 15 mm diameter for fixing the scanner unit and one hole of 25-30 mm diameter for the signal cable.

Fastening the Radiator to the Radiator Bracket

For your reference, scanner installation materials list appears on page A-8.

1. Remove the radiator cap from the radiator bracket.
2. Coat contacting surface between scanner radiator and radiator bracket with anticorrosive sealant as shown below.

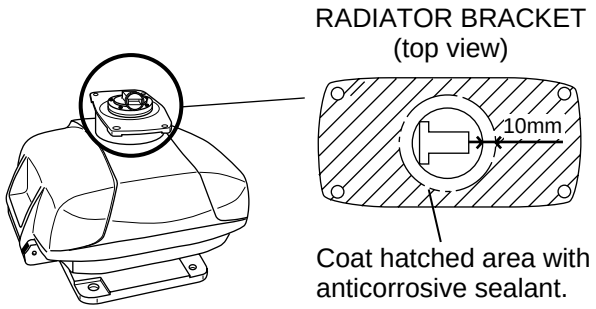

Figure 2 Coating scanner bracket with anticorrosive sealant

3. Coat threaded holes on the scanner radiator with anticorrosive sealant.
4. Grease the O-ring and set it to the radiator bracket.
5. Lay the scanner radiator on the radiator bracket.
6. Coat the radiator fixing bolts (4 pcs.) with anticorrosive sealant. Fasten the scanner radiator to the radiator bracket with the radiator fixing bolts, flat washers and spring washers.

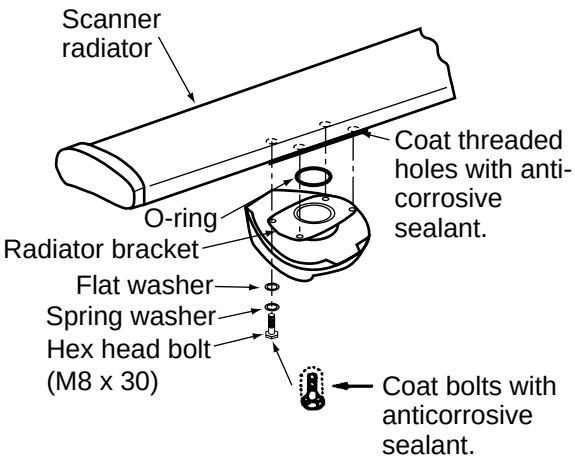

Figure 3 Fastening the radiator bracket to the scanner unit chassis

Mounting the Scanner Unit

The scanner unit can be mounted using the fixing holes on the outside (200 x 200 mm) or inside (140 x 150 mm) the scanner unit.

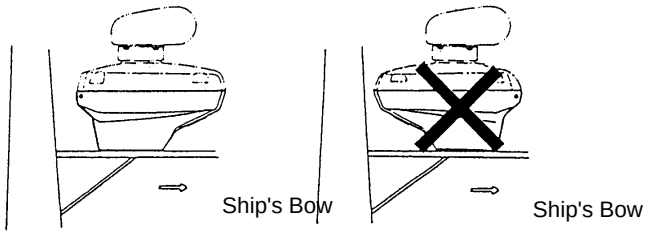

Figure 4 Mounting of Scanner Unit

Outside fixing holes

Use the hex. bolt (supplied) to mount the scanner unit as below.

1. Lay the corrosion-proof rubber mat (supplied) on the mounting platform.

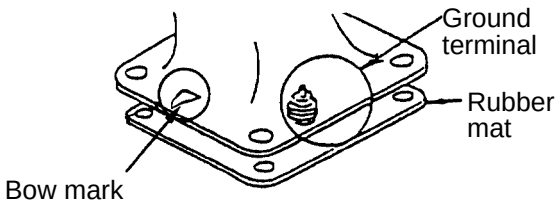

Figure 5 Location of rubber mat

2. Lay the scanner unit on the mounting platform, orienting it as shown in Figure 6.

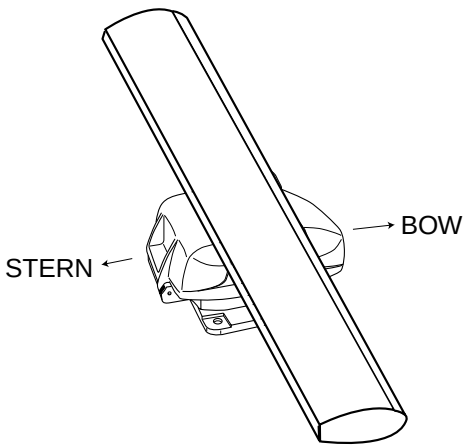

Figure 6 Scanner unit

⚠ CAUTION

Do not lift the antenna unit by the radiator; lift it by the housing.

The radiator may be damaged.

3. Insert four hex bolts and seal washers from the top of the scanner housing. Insert the seal washers with the larger diameter next to the bolt heads. Be sure the seal washer, not other washers, is next to bolt head.

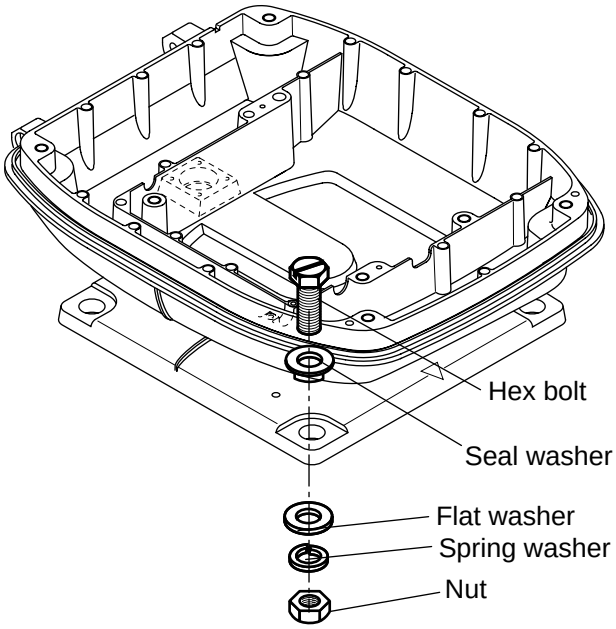

Figure 7 Fixing the scanner unit chassis

4. Pass flat washers, spring washers and nuts onto hex bolts. Fasten by tightening nuts. Do not fasten by tightening the hex bolts; seal washers may be damaged.

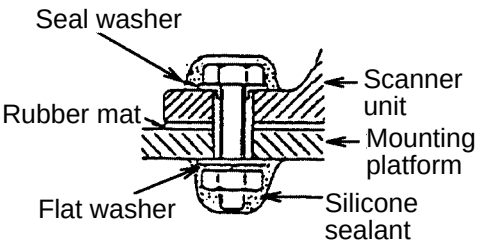

Figure 8 How to fasten scanner unit to mounting platform

5. Coat flat washers, spring washers, nuts and exposed parts of bolts with silicone sealant.

6. Prepare ground point in mounting platform (within 300 mm of ground terminal on scannere unit) using M6 x 25 bolt, nut and flat washer.

7. Run the ground wire (RW-4747, 340 mm) between the ground terminal and ground point.

8. Coat ground terminal and ground point with silicone sealant as shown in Figure 9.

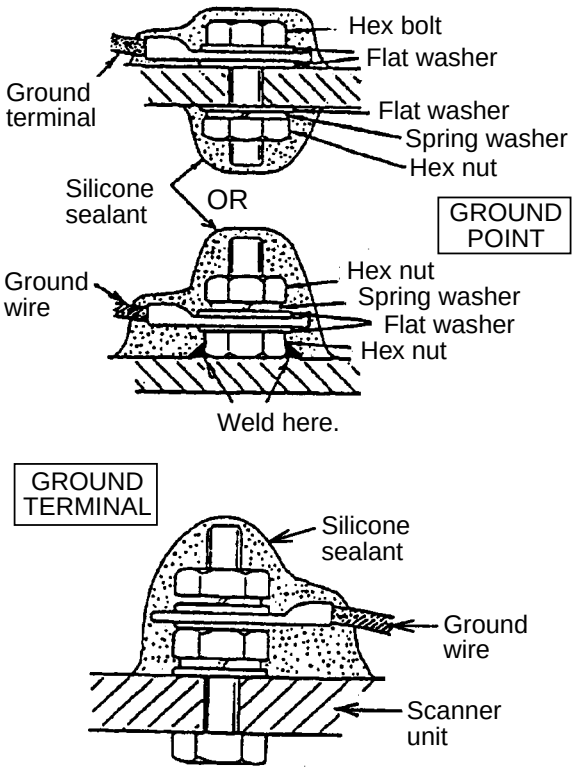

Figure 9 How to coat ground point and ground terminal with silicone sealant

Fixing holes inside scanner unit

This method requires removal of the RF unit in the scanner unit to access inside fixing holes. Use hex. bolts, flat washers, spring washers and nuts (local supply) to mount the scanner unit, confirming length of bolts.

1. Loosen four scanner bolts to open the scanner unit.
   Refer to Figure 11 for location.

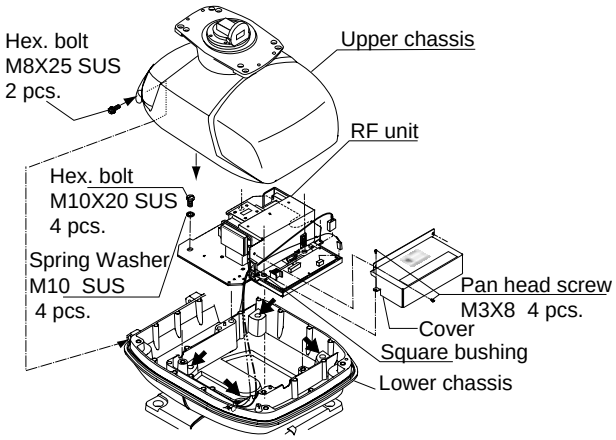

Figure 10 Scanner unit chassis, upper chassis separated

2. Unplug connector connected between upper and lower chassis.
3. Separate upper chassis from lower chassis by removing two hex. bolts.
4. Remove cover by unfastening four pan head screws.
5. Remove connector from RF unit.
6. Remove RF unit by unfastening four hex. bolts.
7. Lay the corrosion-proof rubber mat (supplied) on the mounting platform.
8. Fasten the lower chassis to the mounting platform with hex. bolts, spring washers, flat washers and nuts (local supply), and then coat flat washers, spring washers, nuts and exposed parts of bolts with silicone sealant.

   Cut a slit in rubber bushing to insert bolts. Seal washers are not required.
9. Reassemble RF unit, cover and upper chassis.
10. Set four knob caps (supplied) into outside fixing holes.
11. Do steps 6-8 in “Outside fixing holes”.

Connecting the Signal Cable

Only the signal cable runs from the display unit to the scanner unit. In order to minimize the chance of picking up electrical interference, avoid where possible routing the signal cable near other onboard electrical equipment. Also, avoid running the cable in parallel with power cables. Pass the cable through the hole and apply sealing compound around the hole for waterproofing.

1. Open the scanner cover by loosening four scanner bolts, and then fix the stay.

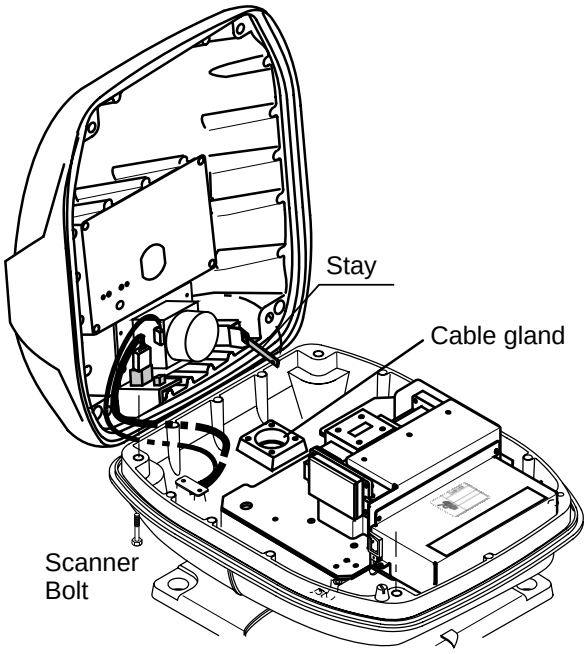

Figure 11 Scanner unit chassis, cover opened

2. Fabricate the signal cable as shown below.

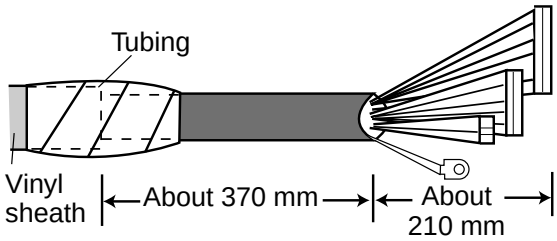

Figure 12 Fabrication of signal cable

3. Unfasten the cable gland assembly (plate, gasket, flat washer).
4. Pass the signal cable w/connector through the bottom of the scanner unit chassis. Pass the cable through the gland assembly as shown below.

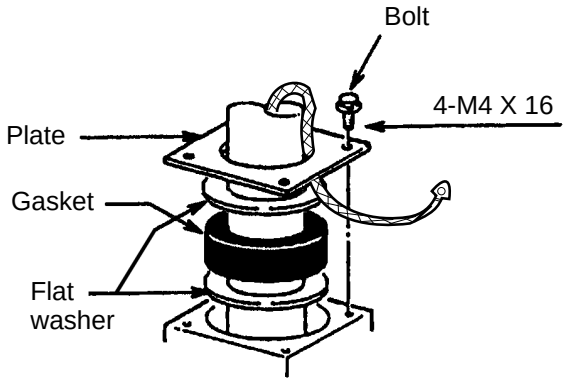

Figure 13 Passing the signal cable through the cable gland assembly

5. Fasten the crimp-on lug on the shield to one of the fixing bolts of the cable gland assembly.
6. Position the signal cable so that no more than 4 cm of the sheath is exposed as shown in the figure below. Tighten fixing bolts.

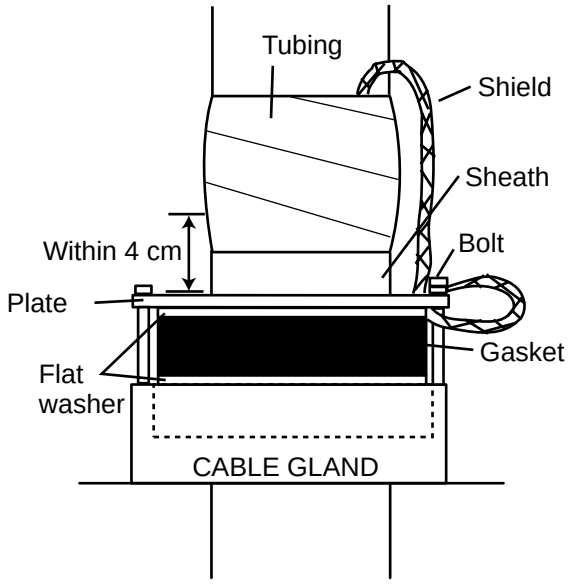

Figure 14 How to fix signal cable in cable gland

7. Unfasten four screws shown in the figure below.

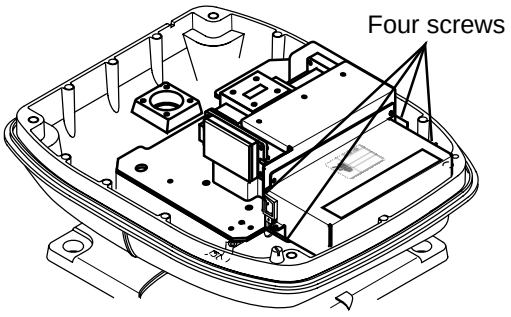

Figure 15 Scanner unit chassis, cover opened

8. Pass the signal cable through the cable protector.

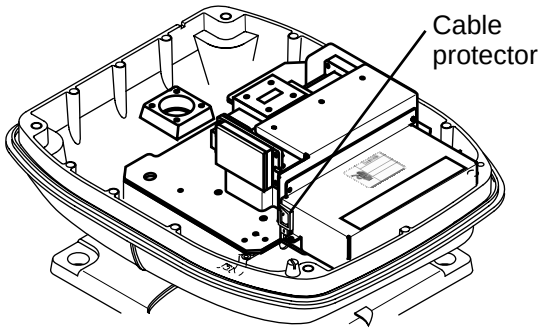

Figure 16 Scanner unit chassis, cover opened

9. Connect the signal cable to the RTB Board (03P9249), referring to the interconnection diagram and the figure below.
10. Attach three EMI cores to the signal cable as shown below.

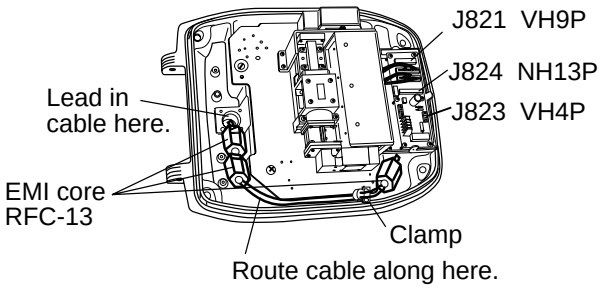

Figure 17 Scanner unit chassis, cover opened

11. Fix the signal cable with the cable clamp.
12. Release the stay and close the cover. Loosely fasten the cover fixing screws; you will have to make some adjustments inside after completion of wiring.

Note: When closing the cover, set the gaskets to grooves in the bottom chassis, then tighten bolts.

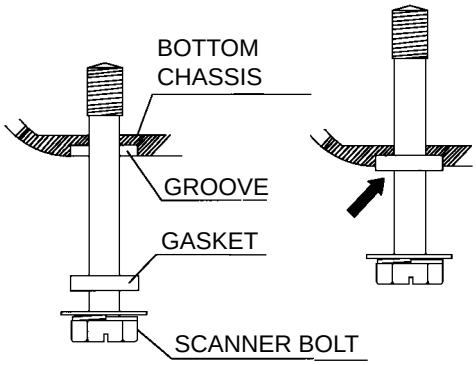

Torque : 9.8 ± 0.1N · m

DISPLAY UNIT

Mounting Considerations

The display unit can be mounted on a tabletop, a bulkhead or on the overhead. When selecting a mounting location, keep in mind the following points:

- Select a location where the display unit can be viewed and operated conveniently and where the screen can be viewed while facing towards the bow.
- Locate the equipment away from places subject to water splash and rain.
- The display unit weighs 13 kg. Be sure the mounting location is strong enough to support the weight of the unit under the continued vibration which is normally experienced on the ship. If necessary reinforce the mounting location.
- Leave sufficient space on the sides and rear of the unit to facilitate maintenance. Also, leave a foot or so of “service loop” in cables behind the unit so it can be pulled forward for servicing or easy removal of connectors.
- A magnetic compass will be affected if placed too close to the display unit. Observe the following compass safe distances to prevent deviation of a magnetic compass: Standard compass, 1.0 m, Steering compass, 0.8 m.

Tabletop Mounting

1. Unfasten the two bolts at the front of the display unit to dismount the mounting base.
2. Using the mounting base as a template mark fixing holes in the mounting location.
3. Fasten the mounting base to the tabletop with M10 bolts or coach screws.
4. Set the display unit to the mounting base and fasten it with the bolts removed at step 1.

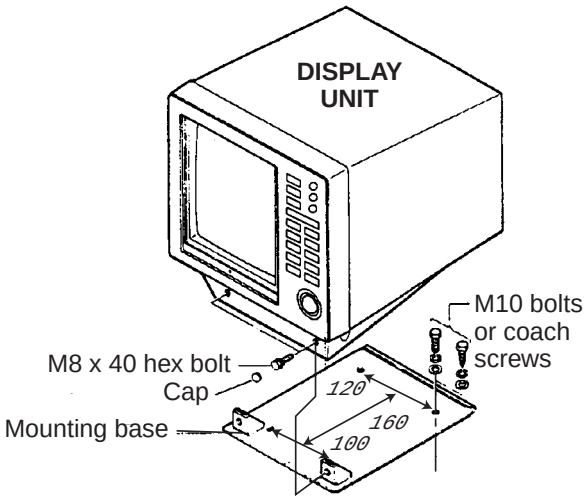

Figure 17 Tabletop mounting of display unit

Bulkhead, Overhead Mounting

The display unit is shipped ready for mounting on a tabletop. However, it may also be mounted on a bulkhead or on the overhead, following the illustration below.

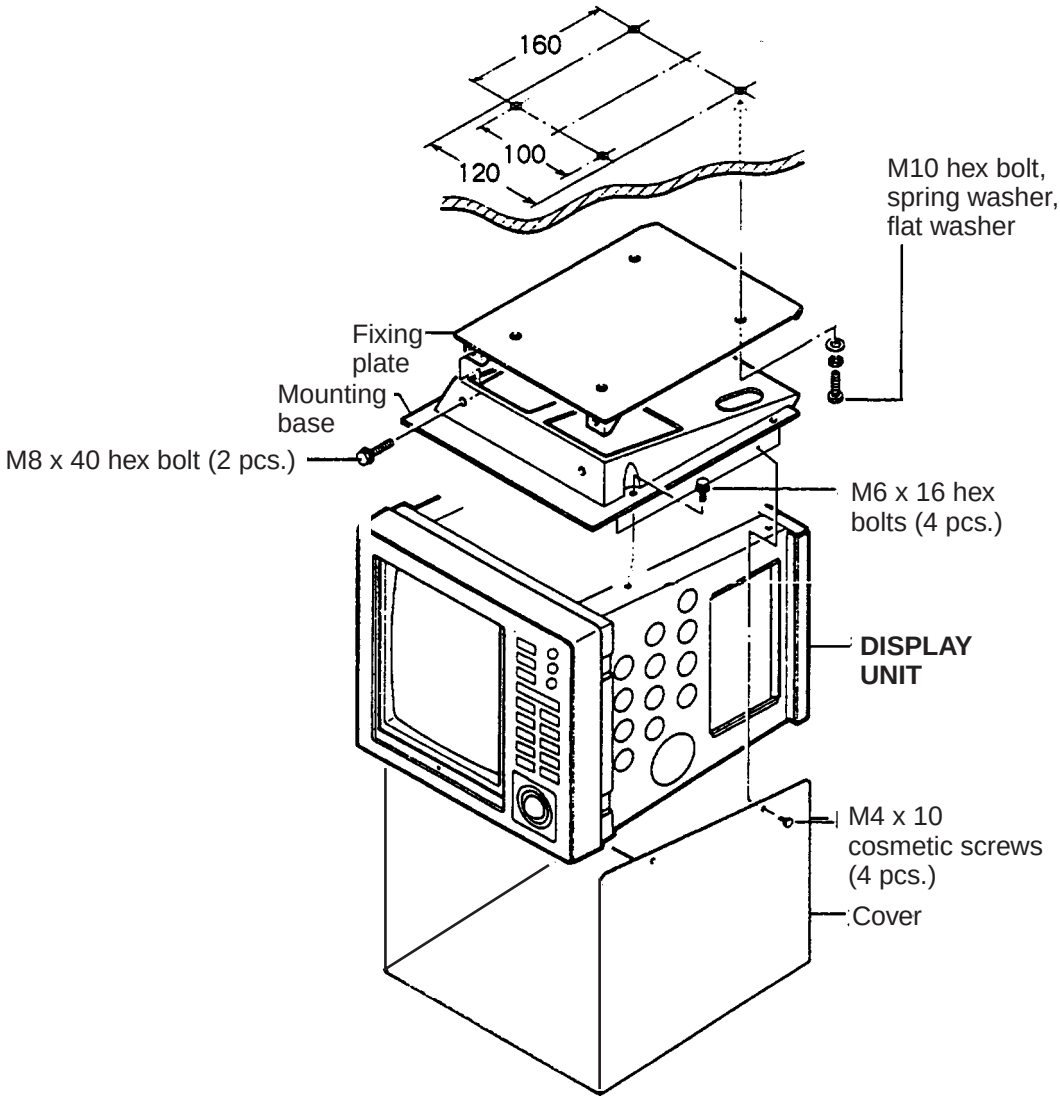

Figure 18 Bulkhead, overhead mounting

WIRING

All wiring are terminated at the rear of the display unit. Connect the scanner unit, power supply and external equipment, referring to the drawing below for connector location. Be sure to ground the display unit.

⚠ CAUTION

Use the power cable supplied with the radar.

Ground the equipment to prevent electrical shock and mutual interference.

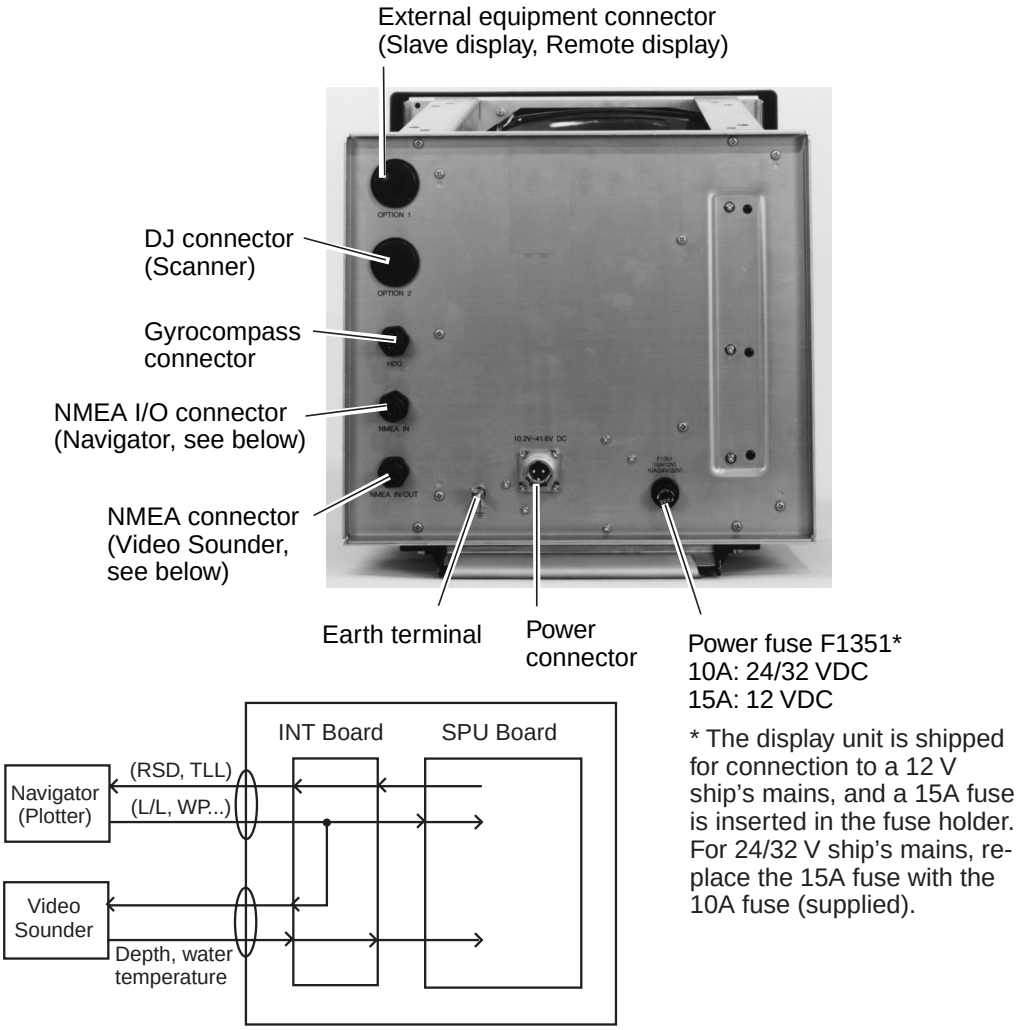

Figure 19 Display unit, rear view

ADJUSTMENTS, INITIAL SETTINGS

Adjustments, Initial Settings

1. Displaying the Installation Setup menu

Most adjustments and initial settings may be completed on the Installation Setup menu, and you can display this menu as follows:

1. Press the HM OFF control while turning on the power. Release the control when you hear a beep.
2. Press the [MENU] key. The MAIN menu appears.

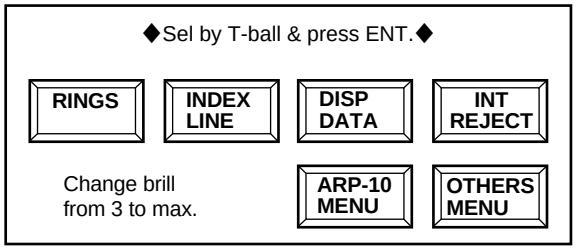

Figure 20 Main menu

3. Select OTHERS menu with the trackball and press the [ACQ/ENTER] key.
4. Select 23. Installation Setup menu with the trackball and press the [ACQ/ENTER] key.

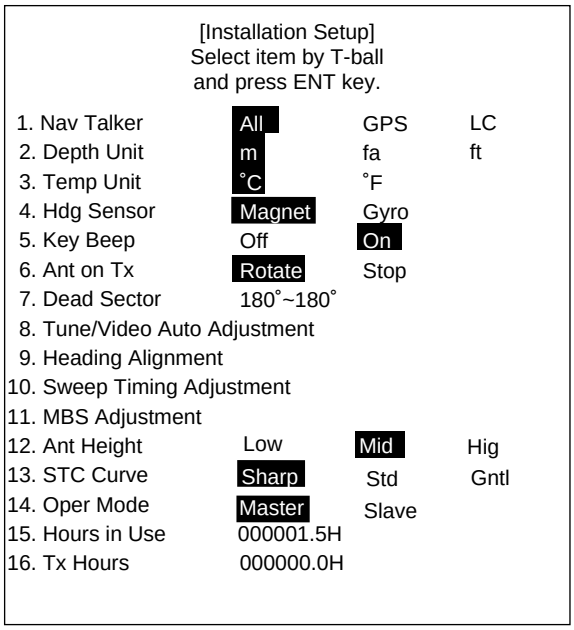

Figure 21 Installation Setup menu

5. Select menu item with the trackball and press the [ACQ/ENTER] key.
6. Select menu option with the trackball and press the [ACQ/ENTER] key to register.

2. Selecting a navaid

1. Select 1. Nav Talker on the Installation Setup menu and press the [ACQ/ENTER] key.
2. Select type of navaid connected to the radar; All, GPS or LC (Loran C). “All” displays GPS and Loran C position data alternately.
3. Press the [ACQ/ENTER] key.

3. Selecting a heading sensor

1. Select 4. Hdg Sensor on the Installation Setup menu and press the [ACQ/ENTER] key.
2. Select type of heading sensor connected to the radar; magnetic compass (for example, C-2000, PG-1000) or gyrocompass (requires AD-10 Gyro Converter).
3. Press the [ACQ/ENTER] key.

4. Adjusting tuning, video amplifier input level

Do the following to automatically adjust tuning and video amplifier level input.

1. Press the [STBY/TX] key to transmit.
2. Select 8. Tune/Video Adjustment on the Installation Setup menu and press the [ACQ/ENTER] key. The unit automatically adjusts tuning and video amplifier input level, displaying the following message:

[Tune/Video Auto Adjustment]

Now under correction.

Return to installation setup
menu after the correction.

Figure 22 Tune/video auto adjustment message

3. When adjustment is completed, the message disappears.

5. Aligning heading

You have mounted the scanner unit facing straight ahead in the direction of the bow. Therefore, a small but conspicuous target dead ahead visually should appear on the heading marker (zero degrees).

In practice, you will probably observe some small bearing error on the display because of the difficulty in achieving accurate initial positioning of the scanner unit. The following adjustment will compensate for this error.

1. Identify a suitable target (for example, ship or buoy) at a range between 0.125 to 0.25 nautical miles, preferably near the heading marker. To lessen error, keep echoes in the outer half of the picture by changing the range. Also, be sure the zoom and off center functions are off.
2. Select 9. Heading Alignment on the Installation Setup menu and press the [ACQ/ENTER] key. The following message appears:

[Heading Alignment]
Set EBL1 to center of target
dead ahead and press ENTER.

Correction 0.0°

<Press MENU for inst setup>

Figure 23 Heading alignment message

3. Operate the trackball to bisect target selected at step 1 with the heading marker.
4. Press the [ACQ/ENTER] key.
5. As a final test, move the boat towards a small buoy and confirm that the buoy shows up dead ahead on the radar when it is visually dead ahead.

6. Adjusting sweep timing

This adjustment ensures proper radar performance, especially on short ranges. The radar measures the time required for a transmitted echo to travel to the target and return to the source. The received echo appears on the display based on this time. Thus, at the instant the transmitter is fired, the sweep should start from the center of the display (sometimes called sweep origin).

A trigger pulse generated in the display unit goes to the scanner unit through the signal cable to trigger the transmitter (magnetron). The time taken by the signal to travel up to the scanner unit varies, depending largely on the length of the signal cable. During this period the display unit should wait before starting the sweep. When the display unit is not adjusted correctly, the echoes from a straight local object (for example, a harbor wall or straight pier) will not appear with straight edges – they will be seen as “pushed out” or “pulled in” near the picture center. The range of objects will also be incorrectly shown.

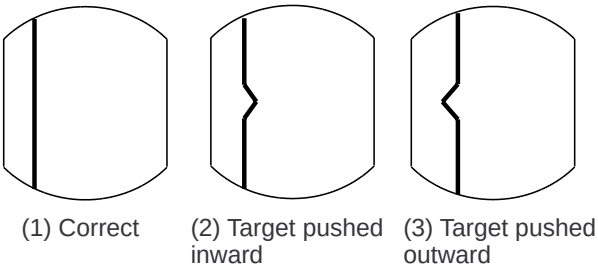

Figure 24 Examples of improper and correct sweep timing

1. Transmit on the shortest range and confirm that the [GAIN] and [A/C SEA] controls are properly adjusted.
2. Visually select a target which forms a straight line (for example, harbor wall, straight pier).
3. Select 10. Sweep Timing Adjustment on the Installation Setup menu and press the [ACQ/ENTER] key. The following message appears:

```
[Sweep Timing Adjustment]
Use T-ball to straighten
target and press ENTER key.

Correction    0.000 nm

<Press MENU for inst setup>
```

Figure 25 Sweep timing adjustment message

4. Operate the trackball to straighten the target selected at step 2, and then press the [ACQ/ENTER] key.

7. Adjusting MBS (Main Bang Suppression)

Main bang, a large filled circle which appears at the display center on short ranges, can be suppressed as follows:

1. Transmit on long range about 10 minutes.
2. Adjust the gain to show a small amount of noise on the display.
3. Change to the 0.125 nautical mile range and adjust the [A/C SEA] control.
4. Select 11. MBS Adjustment on the Installation Setup menu and press the [ACQ/ENTER] key. The following message appears:

```
[MBS Adjustment]
Set value by T-ball
and press ENTER key.

Correction    000

<Press MENU for inst setup>
```

Figure 26 MBS adjustment message

5. Operate the trackball to suppress main bang (adjustment range: 000 to 025).
6. Press the [ACQ/ENTER] key.

8. Entering scanner height

The STC effect changes with respect to scanner height above the waterline. Enter scanner height above the waterline to optimize the STC effect.

1. Select 12. Ant Height on the Installation Setup menu and press the [ACQ/ENTER] key.
2. Select scanner height above the waterline; Low (3 m or less), Mid (3 to 6 m) or High (6 to 10 m).
3. Press the [ACQ/ENTER] key.

9. Selecting STC curve

The STC effect changes with respect to the scanner height above the waterline. The default STC curve can be maintained in most cases. If necessary the STC curve can be changed as follows:

1. Select 13. STC Curve on the Installation Setup menu and press the [ACQ/ENTER] key.
2. Select STC curve desired;
   Sharp: The effective range of the [A/C SEA] control is relatively short.
   Std: Between Sharp and Gentle.
   Gntl (Gentle): The effective range of the [A/C SEA] control is relatively long.
3. Press the [ACQ/ENTER] key.

10. Setting a dead sector

When the scanner is installed at a close distance in front of the wheelhouse, the radar should be set not to transmit within that area, to prevent microwave hazard.

1. Select 7. Dead Sector on the Installation Setup menu and press the [ACQ/ENTER] key.
2. Operate the trackball to enter starting point of sector (in figures).
3. Press the [ACQ/ENTER] key.
4. Operate the trackball to enter ending point of sector (in figures).
5. Press the [ACQ/ENTER] key.

Note: The dead sector graphic can be turned on/off on the OTHERS menu. For further details, see the Operator's Manual.

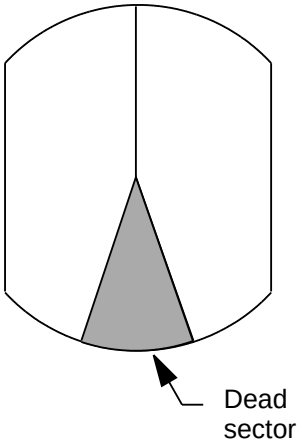

Figure 27 Dead sector

11. Checking magnetron heater voltage

Magnetron heater voltage is formed on the MD Board (03P9235) of the scanner unit, and is preadjusted at the factory for use with any length of signal cable. Therefore no adjustment is required. However, check magnetron heater voltage as follows:

1. Turn on the radar and leave it in stand-by.
2. Open the scanner cover.
3. Unfasten four screws to remove the RF section cover.

⚠ DANGER

ELECTRICAL SHOCK HAZARD

This check is done with the power on — DO NOT touch the magnetron.

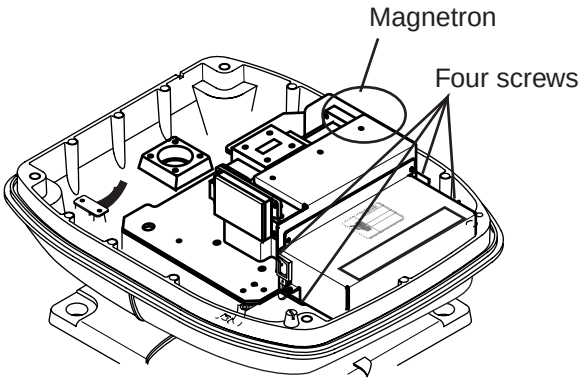

Figure 28 Scanner unit, cover opened

4. Connect a multimeter, set to 10 VDC range, between test point J825#4 and J825#6(GND) on the RTB Board (03P9249).

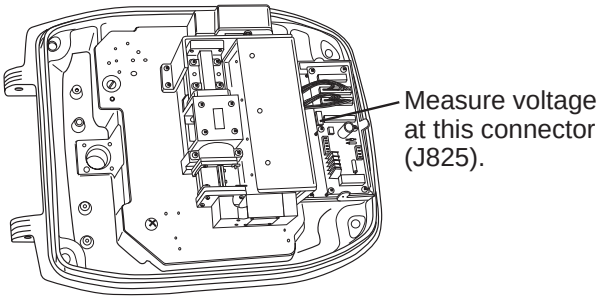

Figure 29 Scanner unit, cover removed

5. Confirm the meter reads 7.6 V ±0.1 V.
6. Close the scanner cover and tighten the cover fixing screws.

ARP-10 INSTALLATION

Necessary Parts

The Auto Plotter ARP-10 is an optional circuit board which is accommodated in the display unit of the FR-7062 to provide manual or automatic acquisition of 10 radar targets.

ARP-10 Installation Kit (000-086-852)

Part	Type	Code No.	Qty
ARP-10 Board	18P9007	008-476-930	1
Spacer	SQ-20	000-801-650	3
Spring Washer	M3 C5191W	000-864-204	3
Pan Head Screw	M3 X 8 C2700W	000-881-404	3
Pan Head Screw w/washer	3 X 8 SWRM10	000-805-774	3

Note: Spacers, spring washers and pan head screws are not used.

In addition to the ARP-10 Board, a heading sensor which outputs heading data in AD format in 25 msec intervals (for example, FURUNO PG-1000) is required.

Installation

1. Unfasten six screws to remove the display unit cover.
2. Mate connector J107 on the SPU Board with connector P107 on the ARP-10 Board.
3. Fix the ARP-10 Board with three pan head screws (supplied).

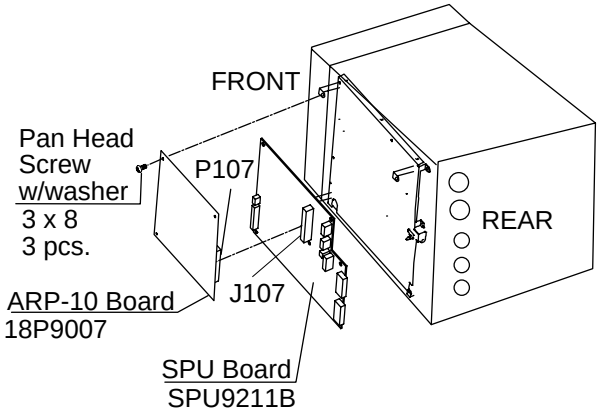

Figure 30 How to install the ARP-10

Adjustments

1. Turn on heading and speed sensors. Turn on the radar and transmit.
2. Press the [MENU] key and select OTHERS menu.
3. Select 22. Self Test and press the [ACQ/ENTER] key. Confirm that the ARP-10 test results show OK for SPEED, COURSE, TRIGGER, VIDEO, BP and HP.

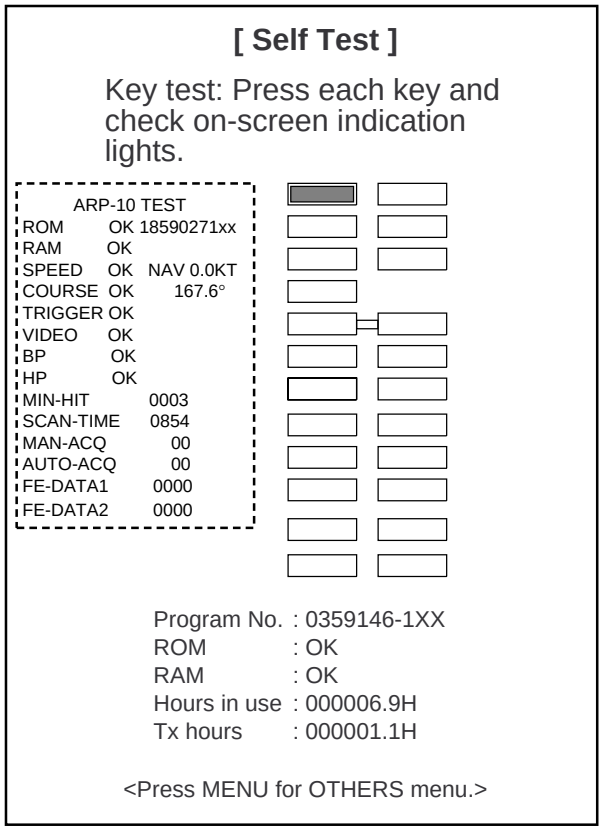

Figure 31 Self test display

4. Adjust the GAIN, A/C and A/C RAIN controls so FE-DATA1 and FE-DATA2 indications on the ARP-10 TEST show less than 1,000. Also, raise/lower the gain while watching the FE-DATA1 and FE-DATA2 indications. Confirm that the FE-DATA1 and FE-DATA2 indications rise/lower according to GAIN control adjustment.

FURUNO

CODE NO.	008-503-360	03FR-X-9401 -7
TYPE	CP03-18401	1/2

工事材料表

INSTALLATION MATERIALS

番号 NO.	名称 NAME	略図 OUTLINE	型名／規格 DESCRIPTIONS		数量 Q'TY	用途／備考 REMARKS
1	ｼｰﾙﾜｯｼｬ SEAL WASHER	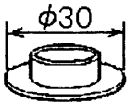	03-001-3002-0	CODE NO. 300-130-020	4	
2	防蝕ゴム CORROSION-PROOF RUBBER MAT	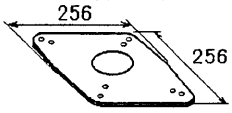	03-142-3001-0	CODE NO. 100-275-580	1	
3	ｷｬｯﾌﾟ CAP	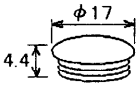	040-4010	CODE NO. 000-515-332	4	
4	六角ﾅｯﾄ 1種 HEX.NUT	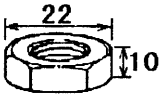	M12 SUS304	CODE NO. 000-863-112	4	
5	ﾐｶﾞｷ平座金 FLAT WASHER	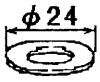	M12 SUS304	CODE NO. 000-864-132	4	
6	ﾊﾞﾈ座金 SPRING WASHER		M12 SUS304	CODE NO. 000-864-263	4	
7	六角ﾎﾞﾙﾄ（全ﾈｼﾞ） HEX. BOLT	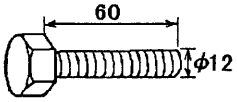	M12X60 SUS304	CODE NO. 000-862-191	4	
8	六角ﾅｯﾄ 1種 HEX.NUT	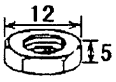	M6 SUS304	CODE NO. 000-863-109	1	
9	ﾐｶﾞｷ平座金 FLAT WASHER		M6 SUS304	CODE NO. 000-864-129	3	
10	ﾊﾞﾈ座金 SPRING WASHER		M6 SUS304	CODE NO. 000-864-260	1	

DWG NO.
C3459-M02- G

FURUNO ELECTRIC CO., LTD.

（略図の寸法は、参考値です。 DIMENSIONS IN DRAWING FOR REFERENCE ONLY.）

FURUNO

CODE NO.	008-503-360	03FR-X-9401 -7
TYPE	CP03-18401	2/2

工事材料表

INSTALLATION MATERIALS

番号 NO.	名称 NAME	略図 OUTLINE	型名／規格 DESCRIPTIONS		数量 Q'TY	用途／備考 REMARKS
11	六角ボルト HEX.BOLT	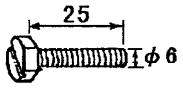	M6X25 SUS304		1	
			CODE NO.	000-862-180		
12	EMIコア EMI CORE	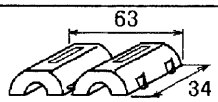	RFC-13		3	
			CODE NO.	000-141-084		
13	アース線 GROUNDING WIRE	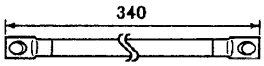	RW-4747-1 03S4747		1	
			CODE NO.	000-566-000		

DWG NO.
C3459-M04- G

FURUNO ELECTRIC CO., LTD.

(略図の寸法は、参考値です。 DIMENSIONS IN DRAWING FOR REFERENCE ONLY.)

FURUNO

CODE NO.		03FR-X-9402 -1
TYPE		1/1

工事材料表

INSTALLATION MATERIALS

FR-7062/7112 船舶用ﾚｰﾀﾞ

MARINE RADAR

番号 NO.	名称 NAME	略図 OUTLINE	型名／規格 DESCRIPTIONS		数量 Q'TY	用途／備考 REMARKS
1	電源ｹｰﾌﾞﾙ組品 POWER CABLE ASSY.	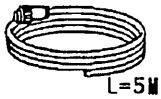 L=5M	03S9235		1	
			CODE NO.	000-134-086		
2	ｹｰﾌﾞﾙ組品 CABLE ASSY.	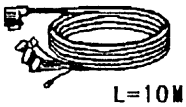 L=10M	MJ-B24LPF0005-100		1	選択 TO BE SELECTED
			CODE NO.	000-140-434		
3	ｹｰﾌﾞﾙ組品 CABLE ASSY.	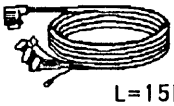 L=15M	MJ-B24LPF0005-150		1	選択 TO BE SELECTED
			CODE NO.	000-140-435		
4	ｹｰﾌﾞﾙ組品 CABLE ASSY.	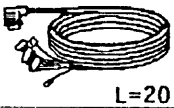 L=20M	MJ-B24LPF0005-200		1	選択 TO BE SELECTED
			CODE NO.	000-140-436		
5	ｹｰﾌﾞﾙ組品 CABLE ASSY.	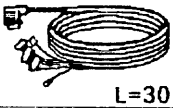 L=30M	MJ-B24LPF0005-300		1	選択 TO BE SELECTED
			CODE NO.	000-140-437		

DWG NO.
C3459-M03- B

FURUNO ELECTRIC CO., LTD

（略図の寸法は、参考値です。 DIMENSIONS IN DRAWING FOR REFERENCE ONLY.）

FURUNO

CODE NO.	008-223-520	03CS-X-9501 -4
TYPE	FP03-02910	1/1

付属品表

ACCESSORIES

FR-7000/8000
FMD-8000 SERISES

船舶用ﾚｰﾀﾞ

MARINE RADAR

番号 NO.	名称 NAME	略図 OUTLINE	型名／規格 DESCRIPTIONS	数量 Q'TY	用途／備考 REMARKS
1	ﾌｰﾄﾞ組品 HOOD ASSY.	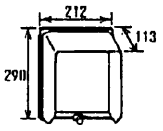	FP03-02910 CODE NO. 008-223-520	1	

C3314-004- E

FURUNO ELECTRIC CO., LTD

（略図の寸法は、参考値です。 DIMENSIONS IN DRAWING FOR REFERENCE ONLY.）

FURUNO

CODE NO.	008-411-810	03DV-X-9502 -0
TYPE	FP03-04310	1/1

付属品表

ACCESSORIES

FR-7000/FCR-1000 SERISES

ﾚｰﾀﾞｰ

RADAR

番号 NO.	名称 NAME	略図 OUTLINE	型名／規格 DESCRIPTIONS		数量 Q'TY	用途／備考 REMARKS
1	ｷｬｯﾌﾟ BLIND CAP	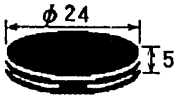	040-5025		2	
			CODE NO.	000-117-940		

C3392-F04- A

FURUNO ELECTRIC CO., LTD

（略図の寸法は、参考値です。 DIMENSIONS IN DRAWING FOR REFERENCE ONLY.）

FURUNO

CODE NO.	000-085-692	03E0-X-9301 -3
TYPE	SP03-10200	BOX NO. P

SHIP NO.	SPARE PARTS LIST FOR	U S E	SETS PER VESSEL
	船舶用ﾚｰﾀﾞｰ MARINE RADAR	FR-7041/7041R/7111/7061/ 7112/7252/MODEL1941R	

ITEM NO.	NAME OF PART	OUTLINE	DWG. NO. OR TYPE NO.	QUANTITY WORKING PER SET	QUANTITY WORKING PER VES	QUANTITY SPARE	REMARKS/CODE NO.
1	ﾋｭｰｽﾞ FUSE	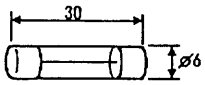	FGBO 15A AC125V	1		2	指示部用 FOR DISPLAY UNIT 000-549-014
2	ﾋｭｰｽﾞ FUSE	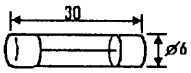	FGBO 10A AC125V	1		2	指示部用 FOR DISPLAY UNIT 000-549-065

MFR'S NAME	FURUNO ELECTRIC CO.,LTD	DWG NO.	C3381-P01- D	1/1

(略図の寸法は、参考値です。 DIMENSIONS IN DRAWING FOR REFERENCE ONLY.)

PACKING LIST

19AK-X-9856 -2 1/1

XN10A, XN12A

NAME	OUTLINE	DESCRIPTION/CODE No.	Q'TY
ユニット UNIT			
ｱﾝﾃﾅ ANTENNA	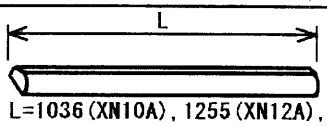 L=1036(XN10A), 1255(XN12A),	XN10A, 12A 008-523-***	1
ｱﾝﾃﾅ工材 ANTENNA INSTALLATION MATERIALS			
Oﾘﾝｸﾞ O-RING		JISB2401-1A-G80 000-851-313	1
ｽﾘｰﾎﾞﾝﾄﾞ SEALANT	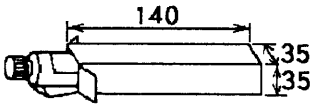	1211 50G 000-854-118	1
六角ﾎﾞﾙﾄ ｽﾘﾜﾘ HEX. BOLT	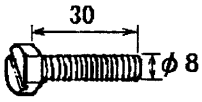	M8X30 SUS304 000-862-151	4
ﾐｶﾞｷ平座金 FLAT WASHER		M8 SUS304 000-864-130	4
バネ座金 SPRING WASHER	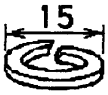	M8 SUS304 000-864-262	4

DWG NO.
C3500-Z01- B

(略図の寸法は、参考値です。 DIMENSIONS IN DRAWING FOR REFERENCE ONLY.)

19AK-X-9856

FURUNO

注　記

1) 装備ケーブルはサービス時、本体を前方に十分引き出せるよう余裕を持たせること。
2) 取付用ネジはM10ボルトまたはコーチボルト呼び径９を使用のこと。
3) #印寸法は最小サービス空間寸法とする。
4) 指定外の寸法公差は、表１による。

NOTE

1. KEEP SUFFICIENT CABLE LENGTH BEHIND THE UNIT FOR MAINTENANCE.
2. USE M10 BOLTS OR φ9 COACH SCREWS FOR FIXING THE UNIT.
3. #: RECOMMENDED SERVICE CLEARANCE.
4. TABLE 1 INDICATES TOLERANCE OF DIMENSIONS.

寸法範囲 (mm) DIMENSION	公差 (mm) TOLERANCE
0＜L≦50	±1.5mm
50＜L≦100	±2.5mm
100＜L≦500	±3mm

表 1
TABLE 1

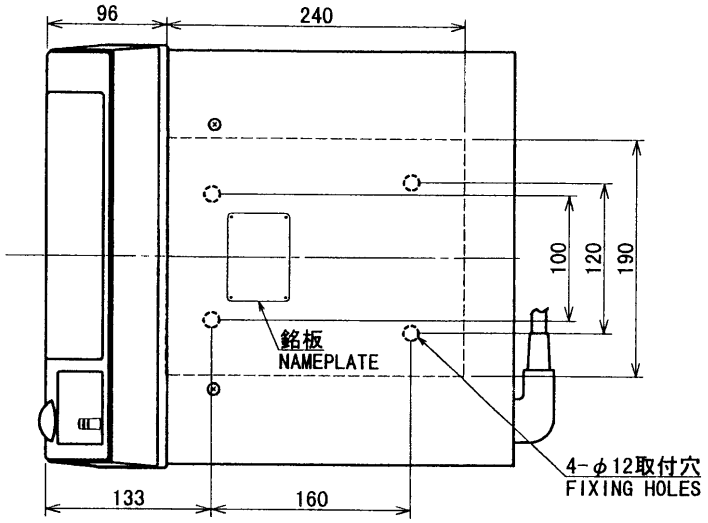

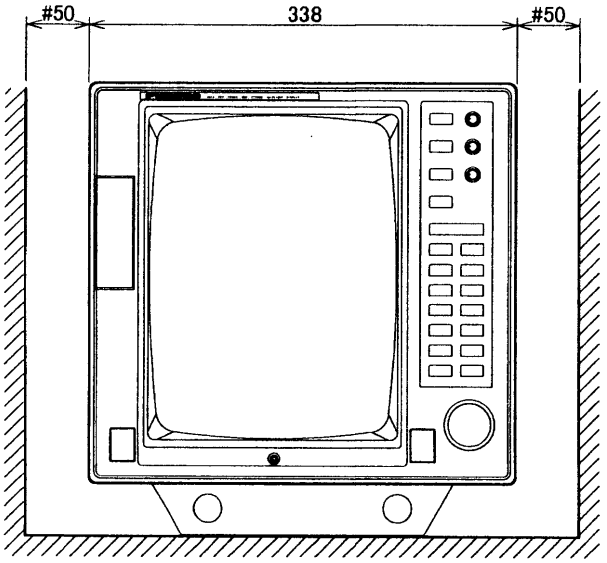

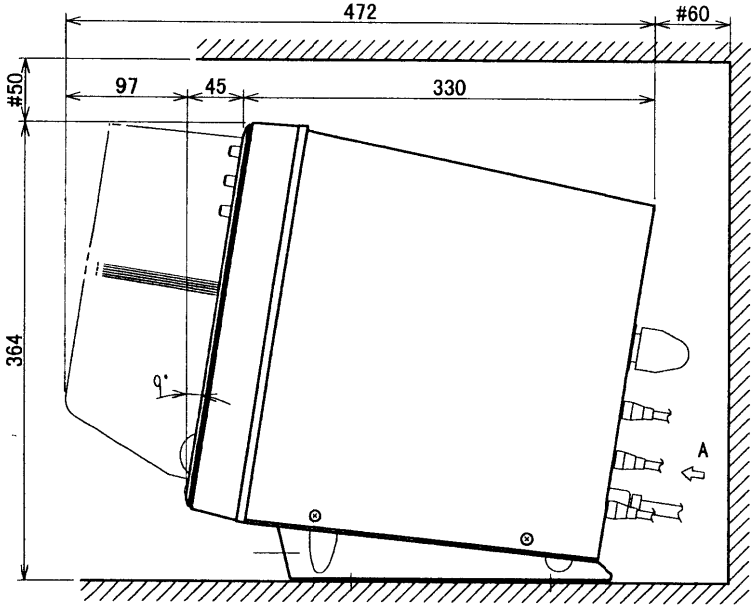

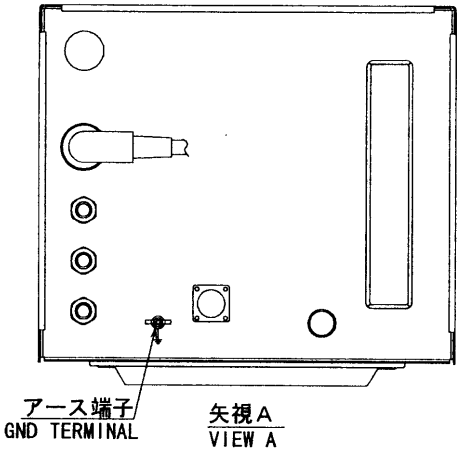

DRAWN July 4'00 T.YAMASAKI			TITLE RDP-122/136
CHECKED July 4'09 ebisu	FR-7041R M2		名称 指示器
APPROVED July 4'00	FR-7112 FR-7062		外寸図
SCALE 1/6	MASS ±10% 13.0 kg		NAME CHANNEL BASE
DWG. No. C3459-G01- C	03-142-1000-G0		OUTLINE DRAWING

FURUNO ELECTRIC CO., LTD.

D-1

FURUNO

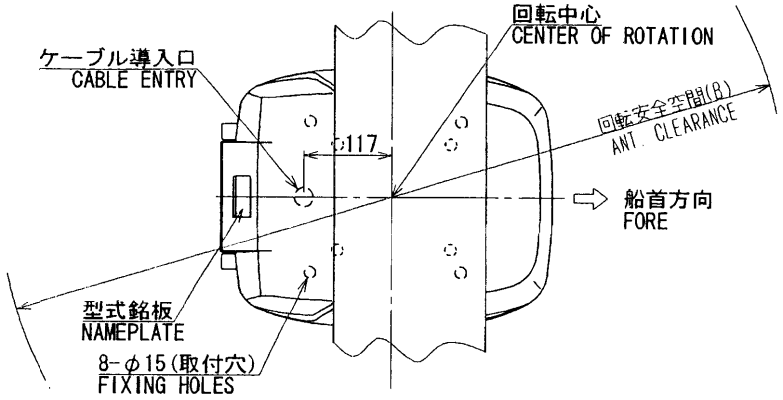

注記
1) 取付はM12ボルトを使用のこと。
2) 指定外寸法公差は表1による。
3) 空中線部の取付台にφ25-30のケーブル貫通穴を開ける。
4) 初期製造分は取付穴寸法240x240で出荷しております。
換装時に注意してください。

NOTE
1. USE M12 BOLTS FOR FIXING UNIT.
2. TABLE 1 INDICATES TOLERANCE OF DIMENSIONS.
3. MAKE A HOLE φ25-30 ON MOUNTING MAST FOR CABLE ENTRY.
4. NOTE FOR REPLACEMENT: FIXING HOLE DIMENSIONS ARE CHANGED FROM 240x240 OF PREVIOUS SETS TO 200x200.

寸法範囲 (mm) DIMENSION	公差 (mm) TOLERANCE
0<L≦50	±1.5mm
50<L≦100	±2.5mm
100<L≦500	±3mm
500<L≦1000	±4mm
1000<L≦2000	±5mm

表1 TABLE 1

種類 TYPE	XN12A	XN13A
空中線長(A) LENGTH (mm)	1255±10	1795±10
安全空間(B) CLEARANCE (mm)	1400	1940
質量 (kg) MASS	23	25

表2 TABLE 2

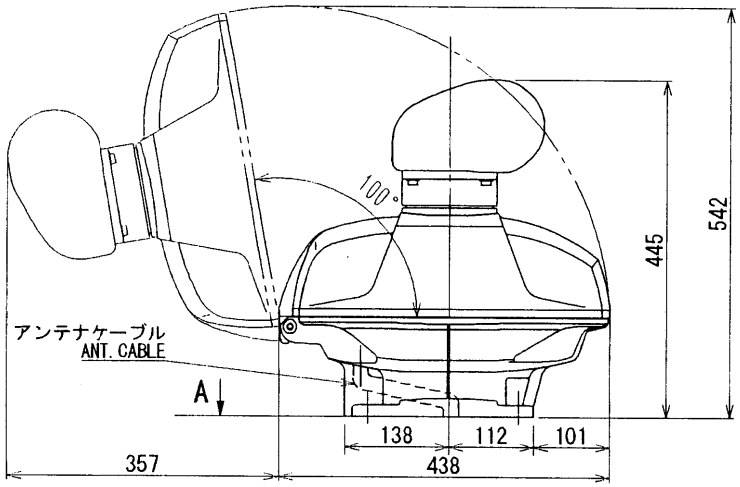

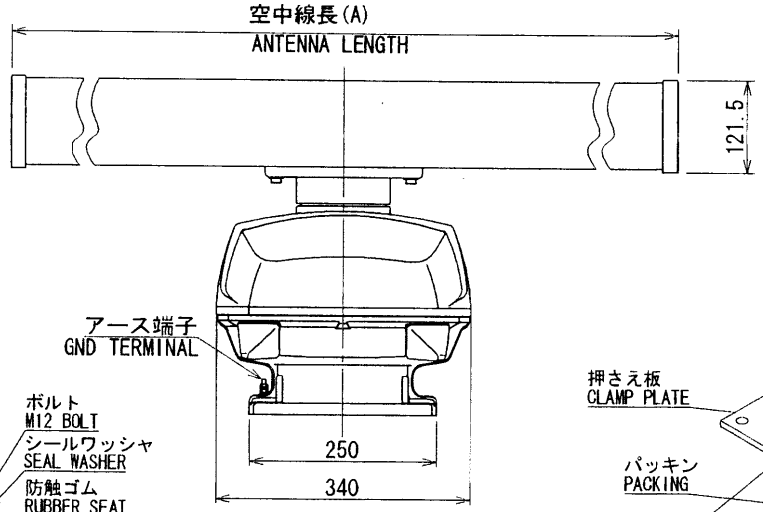

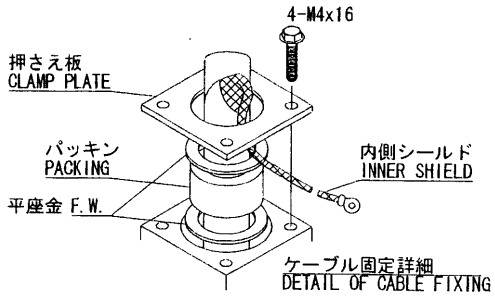

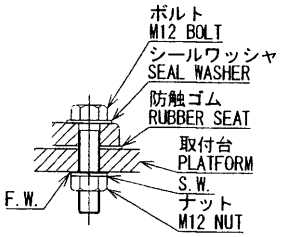

取付け部詳細
DETAIL OF UNIT FIXING

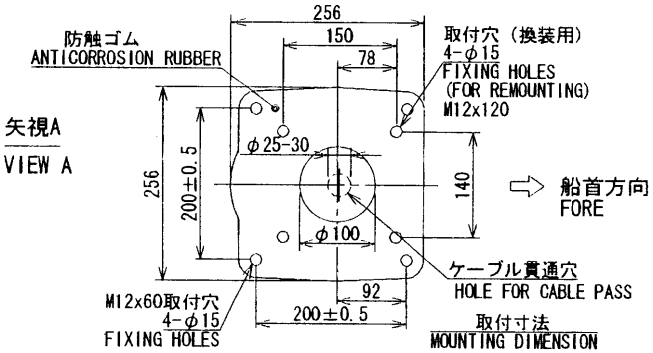

DRAWN July 11 '00 T.YAMASHITA		TITLE	RSB-0070/0072/0073 (XN12A/13A)
CHECKED July 11 '00 Y.Kim	FR-7041R M2 FRS/RS-1000C	名称	空中線部
APPROVED July 11 '00 Y.Kim	MODEL1942M2 FR-7062/7112/7252		外寸図
SCALE 1/10	MASS 表2に記載 SEE TABLE 2	NAME	ANTENNA UNIT
DWG. No. C3459-G03- C	03-142-3000-G3		OUTLINE DRAWING

FURUNO ELECTRIC CO., LTD.

FURUNO

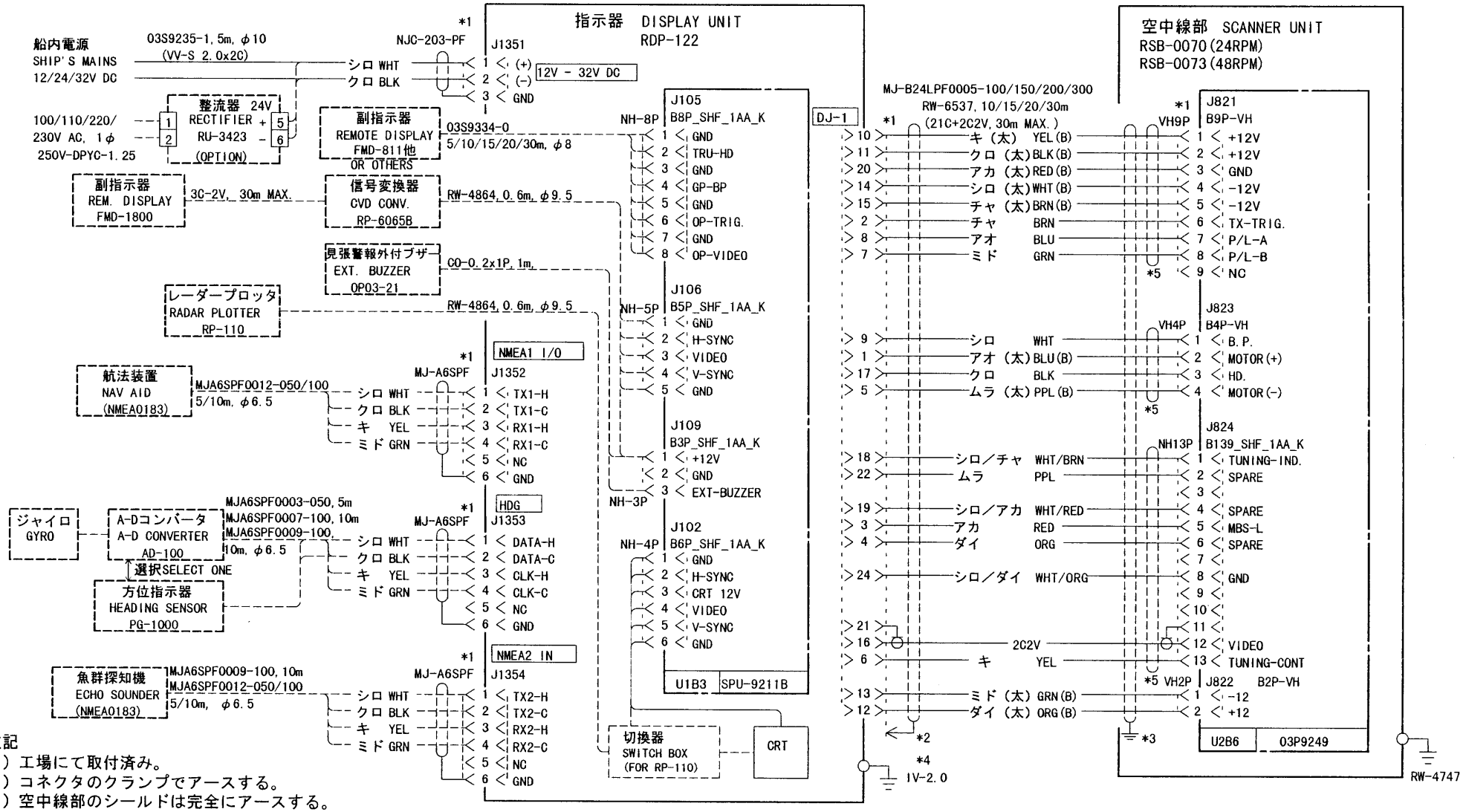

注記
1）工場にて取付済み。
2）コネクタのクランプでアースする。
3）空中線部のシールドは完全にアースする。
4）造船所支給。
5）信号ケーブルにＥＭＩコア（３個）を取り付ける。

NOTE
1. FITTED AT FACTORY.
2. GROUND THRU CONNECTOR CLAMP.
3. GROUND EFFECTIVELY AT SCANNER UNIT.
4. SHIPYARD SUPPLY.
5. ATTACH EMI CORES(3PCS) TO SIGNAL CABLES.

DRAWN Jan 8 '99 T.YAMASAKI		TITLE FR-7062
CHECKED Jan 8 '99 K.Kusunoki		名称 船舶用レーダー
APPROVED Jan 8 '99 K.Kusunoki		相互結線図
SCALE / MASS kg		NAME MARINE RADAR
DWG. No. C3459-C01-D		INTERCONNECTION DIAGRAM

FURUNO ELECTRIC CO., LTD.

S-1

FURUNO

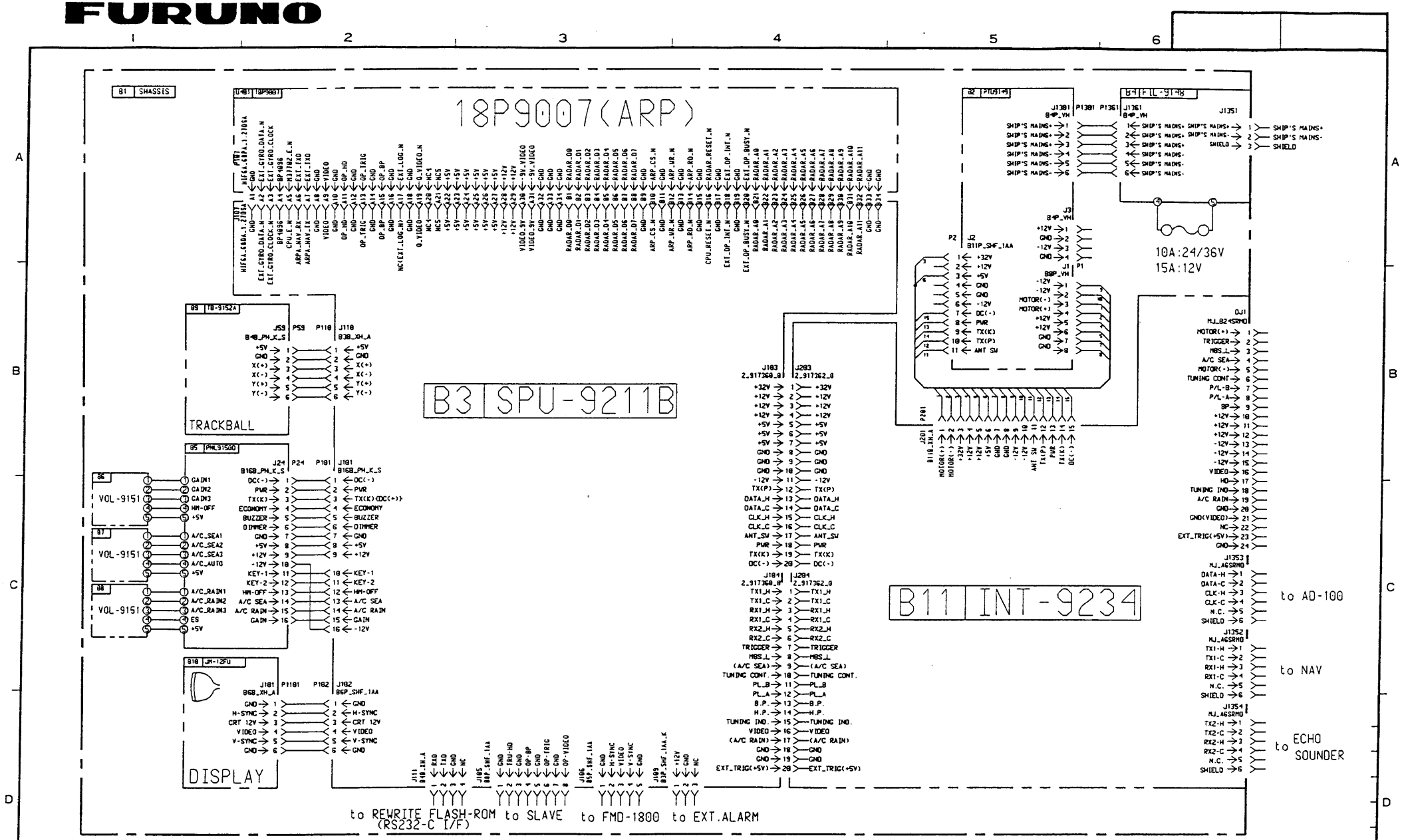

DRAWN Apr.23'98 T.YAMASAKI			TYPE RDP-122
CHECKED Apr.24'98 K.Kusumoto			名称 指示器（総合）
APPROVED Apr.26'98 K.Kusumoto	FR-7112 FR-7062		回路図
SCALE / MASS kg	APPLICABLE TO: (MODEL)	BLOCK NO.	NAME DISPLAY UNIT(GENERAL)
DWG NO. C3459-K01- B	03-142-6004- 1		SCHEMATIC DIAGRAM

FURUNO ELECTRIC CO., LTD.

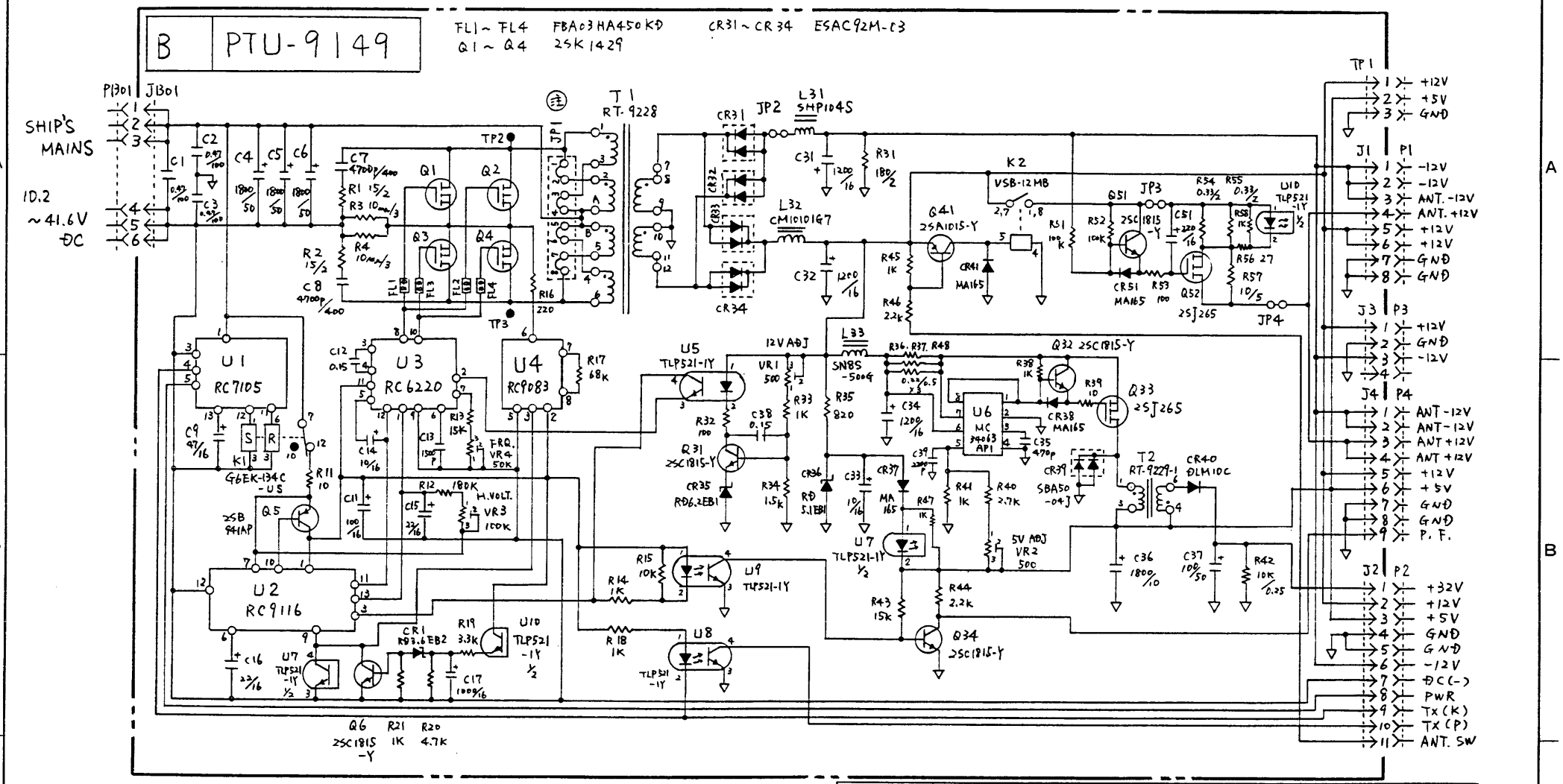

(NOTE)

JP 1: ・FR-1505MK2/1510MK2/1525MK2/8111/8251 は船内電源仕様により下記のとおりジャンパーする。
PTU-9149: 12VDC仕様 ①—②間、③—④間、⑤—⑥間、⑦—⑧間をジャンパーする。
A PTU-9149: 24/32VDC仕様 ②—③間、⑥—⑦間をジャンパーする。

・FR-7062/7112/7252 は機種により下記のとおりジャンパーする。
PTU-9149: FR-7062/7112は ①—②間、③—④間、⑤—⑥間、⑦—⑧間をジャンパーする。
A PTU-9149: FR-7252は ②—③間、⑥—⑦間をジャンパーする。

・FR-711 1は12V仕様で船内電源 10.2～41.6VDC をカバーする。
PTU-9149: 12V仕様のみ ①—②間、③—④間、⑤—⑥間、⑦—⑧間をジャンパーする。

FR-7111	12/24/32 VDC	Jumper between #1-#2, #3-#4, #5-#6, and #7-#8.
FR-8051/8111/8251, FR-1505MK2/1510MK2/1525MK2,	12 VDC	
	24/32 VDC	Jumper between #2-#3 and #6-#7.
FR-7062/7112	12/24/32 VDC	Jumper between #1-#2, #3-#4, #5-#6, and #7-#8.
FR-7252	24/32 VDC	Jumper between #2-#3 and #6-#7.

DRAWN Mar.11.'98 E.Kishi	FR7252		TYPE PTU9149
CHECKED Mar.13 '98 K.Akimoto	FR7112		名称 電源基板
APPROVED Mar.13 '98 K.Wamata	FR7062		回路図
SCALE / MASS kg	FR8111		NAME POWER SUPPLY
DWG NO. C3393-K04- D	FR1525M2		SCHEMATIC DIAGRAM
	FR1510M2		
	APPLICABLE TO: (MODEL)	BLOCK NO.	
	03-127-6010- 0		

古野電気株式会社

FURUNO

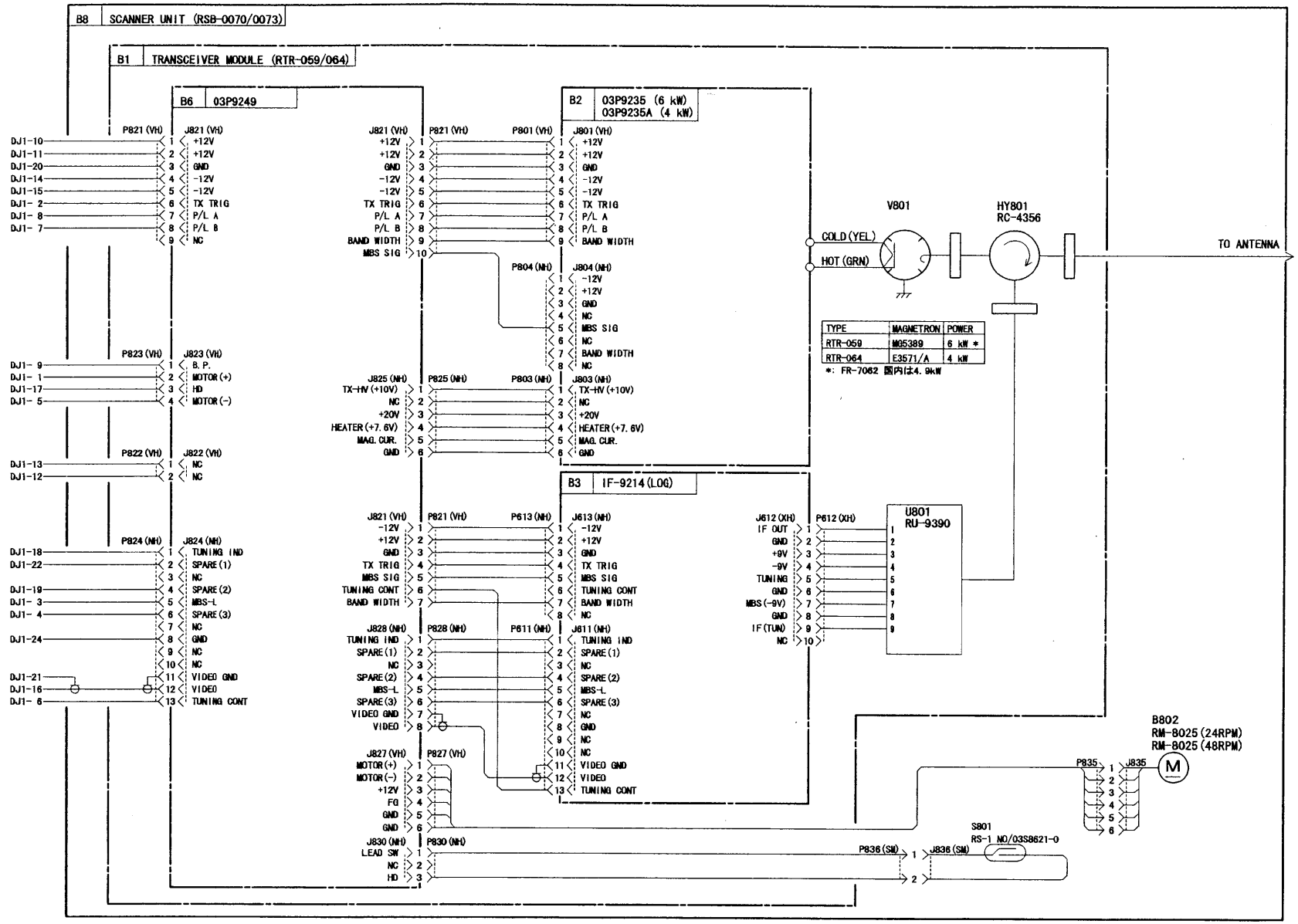

DRAWN May 17 '01 T. YAMASAKI		TITLE	RSB-0070/0073-059/064
CHECKED May 17 '01 Y.K.	FRS-1000B/C, RS-1000C MODEL1933/1933C	名称	空中線部（総合）
APPROVED May 18 '01 Y.K.	MODEL1932M2/1942M2 FR-7062		回路図
SCALE	MASS kg	NAME	SCANNER UNIT (GENERAL)
DWG No. C3459-K02- F	03-142-6009-3		SCHEMATIC DIAGRAM

FURUNO ELECTRIC CO., LTD.