TH24 / TH32

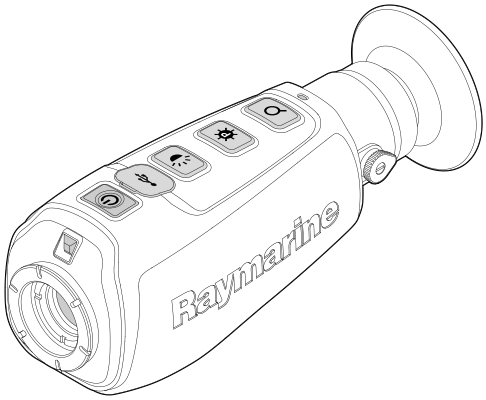

User reference

English
Date: 01-2012
Document number: 81333-2-EN
© 2012 Raymarine UK Limited

Raymarine®

Trademark and patents notice

Autohelm, hsb2, RayTech Navigator, Sail Pilot, SeaTalk, SeaTalkNG, SeaTalkHS and Sportpilot are registered trademarks of Raymarine UK Limited. RayTalk, Seahawk, Smartpilot, Pathfinder and Raymarine are registered trademarks of Raymarine Holdings Limited.

FLIR is a registered trademark of FLIR Systems, Inc. and/or its subsidiaries.

All other trademarks, trade names, or company names referenced herein are used for identification only and are the property of their respective owners.

This product is protected by patents, design patents, patents pending, or design patents pending.

Fair Use Statement

You may print no more than three copies of this manual for your own use. You may not make any further copies or distribute or use the manual in any other way including without limitation exploiting the manual commercially or giving or selling copies to third parties.

Product handbooks

The latest versions of all English and translated handbooks are available to download in PDF format from the website www.raymarine.com.
Please check the website to ensure you have the latest handbooks.

Copyright ©2012 Raymarine UK Ltd. All rights reserved.

ENGLISH
Document number: 81333-2
Date: 01-2012

Contents

Chapter 1 Important information 7
Protect from direct sunlight 7
Product disposal 7
Technical accuracy 7
Warranty registration 7
Water ingress 7
EMC conformance 7
Cleaning the thermal camera 7

Chapter 2 Introduction 9
2.1 Handbook information 10
2.2 TH-Series handheld thermal imaging cameras 10

Chapter 3 Using your camera 13
3.1 Parts supplied 14
3.2 Camera features and controls 14
3.3 Charging the camera 15
3.4 Switching on and off 15
3.5 Power management 16
3.6 Battery status indicator 16
3.7 Adjusting the display brightness 17
3.8 Changing the display mode 17
3.9 Zooming the display (TH32 model only) 18
3.10 Freezing the display (TH24 model only) 18
3.11 Adjusting the eyepiece diopter setting 19

Chapter 4 Troubleshooting and support 21
4.1 TH-Series troubleshooting 22
4.2 Raymarine customer support 23

Chapter 5 Technical specification 25
5.1 TH-Series model-specific features 26
5.2 TH-Series technical data — all models 26

Chapter 6 Options and accessories 27
6.1 Accessories and spare parts 28

Chapter 1: Important information

Warning: Ensure safe navigation

This product is intended only as an aid to navigation and must never be used in preference to sound navigational judgment. Only official government charts and notices to mariners contain all the current information needed for safe navigation, and the captain is responsible for their prudent use. It is the user's responsibility to use official government charts, notices to mariners, caution and proper navigational skill when operating this or any other Raymarine product.

Warning: Maintain a permanent watch

Always maintain a permanent watch, this will allow you to respond to situations as they develop. Failure to maintain a permanent watch puts yourself, your vessel and others at serious risk of harm.

Caution: Do not open the unit

The unit is factory sealed to protect against atmospheric humidity, suspended particulates and other contaminates. It is important that you do not open the unit or remove the casing for any reason. Opening the unit will:

- compromise the seal with possible damage to the unit, and
- void the manufacturer's warranty.

Caution: Service and maintenance

This product contains no user serviceable components. Please refer all maintenance and repair to authorized Raymarine dealers. Unauthorized repair may affect your warranty.

Protect from direct sunlight

Protect from direct sunlight.

To protect your product against the damaging effects of ultra-violet light, always keep your product in the supplied pouch, and out of direct sunlight when not in use.

Product disposal

Dispose of this product in accordance with the WEEE Directive.

The Waste Electrical and Electronic Equipment (WEEE) Directive requires the recycling of waste electrical and electronic equipment. Whilst the WEEE Directive does not apply to some Raymarine products, we support its policy and ask you to be aware of how to dispose of this product.

Technical accuracy

To the best of our knowledge, the information in this document was correct at the time it was produced. However, Raymarine cannot accept liability for any inaccuracies or omissions it may contain. In addition, our policy of continuous product improvement may change specifications without notice. As a result, Raymarine cannot accept liability for any differences between the product and this document. Please check the Raymarine website (www.raymarine.com) to ensure you have the most up-to-date version(s) of the documentation for your product.

Warranty registration

To register your Raymarine product ownership, please visit www.raymarine.com and register online.

It is important that you register your product to receive full warranty benefits. Your unit package includes a bar code label indicating the serial number of the unit. You will need this serial number when registering your product online. You should retain the label for future reference.

Water ingress

Water ingress disclaimer

Although the waterproof rating capacity of this product meets the IPX7 standard, water intrusion and subsequent equipment failure may occur if the product is subjected to commercial high-pressure washing. Raymarine will not warrant products subjected to high-pressure washing.

EMC conformance

To ensure performance is not compromised, keep product away from high levels of interference.

Cleaning the thermal camera

The camera housing and lenses (objective and eyepiece) will require occasional cleaning. Raymarine suggests that you clean lenses when image quality degradation is noticed or excessive contaminant buildup is seen.

When cleaning this product:

- Do NOT wipe lenses with a dry cloth, as this could scratch the coating.
- Do NOT use abrasive, or acid or ammonia based products.
- Do NOT pressure wash.

To clean the camera:

1. Switch off the power to the unit.
2. Clean the camera body with a clean, soft cotton cloth. You can moisten the cloth and use a mild detergent if required.
3. Clean the camera lenses (objective and eyepiece).
   - Rinse lenses with fresh water to remove all dirt particles and salt deposits, and allow to dry naturally.
   - If any spots or smears remain, very gently wipe the lenses with a clean microfibre cloth or soft cotton cloth.
   - If necessary, use isopropyl alcohol (IPA) or a mild detergent to remove any remaining spots or marks.

Chapter 2: Introduction

Chapter contents

- 2.1 Handbook information on page 10
- 2.2 TH-Series handheld thermal imaging cameras on page 10

2.1 Handbook information

This handbook describes operation of Raymarine TH-Series handheld thermal cameras. It provides an overview of features available and examples of the controls used.

This handbook covers the TH24 and TH32 models. It includes information to help you:

- operate the handheld thermal camera.
- obtain support if required.

The handbook is for use with the following products:

- TH24 – 240x180 pixel handheld thermal camera.
- TH32 – 320x240 pixel handheld thermal camera.

This and other Raymarine product documentation is available to download in PDF format from www.raymarine.com.

2.2 TH-Series handheld thermal imaging cameras

TH-Series is a maritime handheld thermal camera that helps you to see in low-light and no-light conditions.

The TH-Series camera uses an infra-red sensor and optics to detect the heat emitted by objects. This enables you to see in total darkness, helping you to navigate at night in dark anchorages, identify obstacles (such as rocks, buoys, and floating debris) and find people in the water.

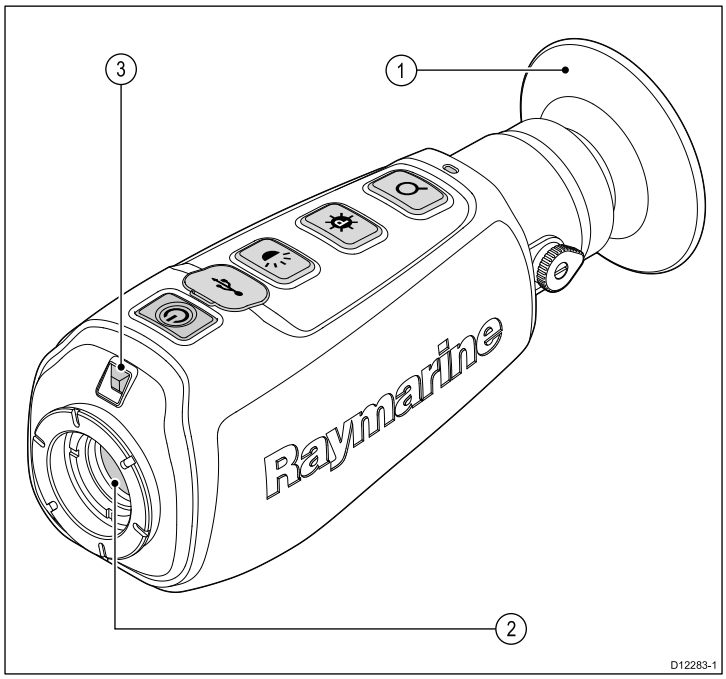

1. Eyepiece
2. Objective lens
3. Tasklight

The following images show how the TH-Series camera can reveal objects that could be a hazard to navigation, and that are difficult to see with the naked eye.

Visible image

TH-Series camera image

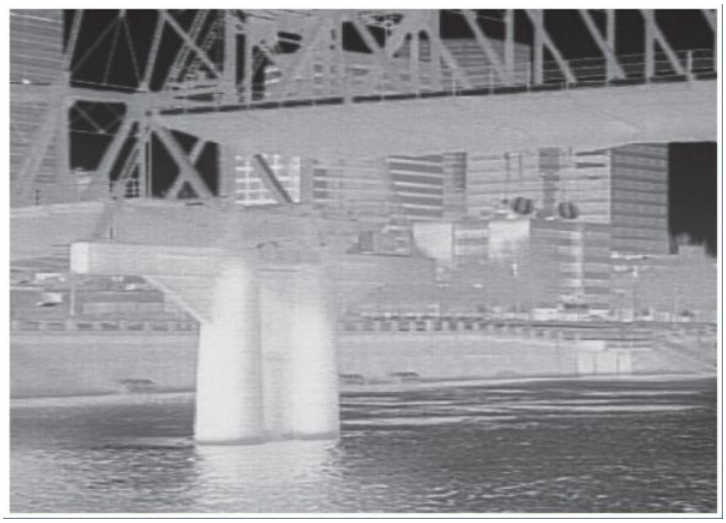

The TH-Series camera has the following key functions and features:

- Rugged design — built to withstand the demands of maritime use.
- Palm-sized portability and lightweight — only 12 oz. (340 g).
- 240x180 (TH24) or 320x240 (TH32) Microbolometer sensor for excellent image quality and clarity.
- FLIR proprietary Digital Detail Enhancement.
- 19mm lens with 24 degree field of view.
- Freeze frame (TH24 model) or digital zoom (TH32 model).
- Automatic focus.
- LED tasklight.
- Rechargeable internal Li-Ion battery (charged via USB cable) — up to 5 hours of camera operation on a single charge.

Chapter 3: Using your camera

Chapter contents

- 3.1 Parts supplied on page 14
- 3.2 Camera features and controls on page 14
- 3.3 Charging the camera on page 15
- 3.4 Switching on and off on page 15
- 3.5 Power management on page 16
- 3.6 Battery status indicator on page 16
- 3.7 Adjusting the display brightness on page 17
- 3.8 Changing the display mode on page 17
- 3.9 Zooming the display (TH32 model only) on page 18
- 3.10 Freezing the display (TH24 model only) on page 18
- 3.11 Adjusting the eyepiece diopter setting on page 19

3.1 Parts supplied

The following items are included in the camera package:

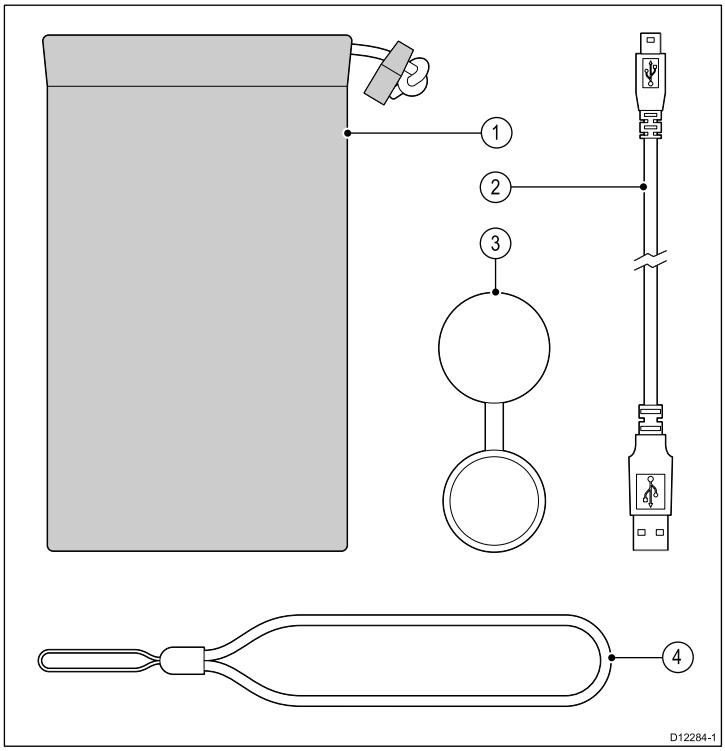

1. Drawstring pouch.
2. USB cable.
3. Lens cover.
4. Wrist strap.

Optional accessories

The following optional accessories are available for the TH-Series camera:

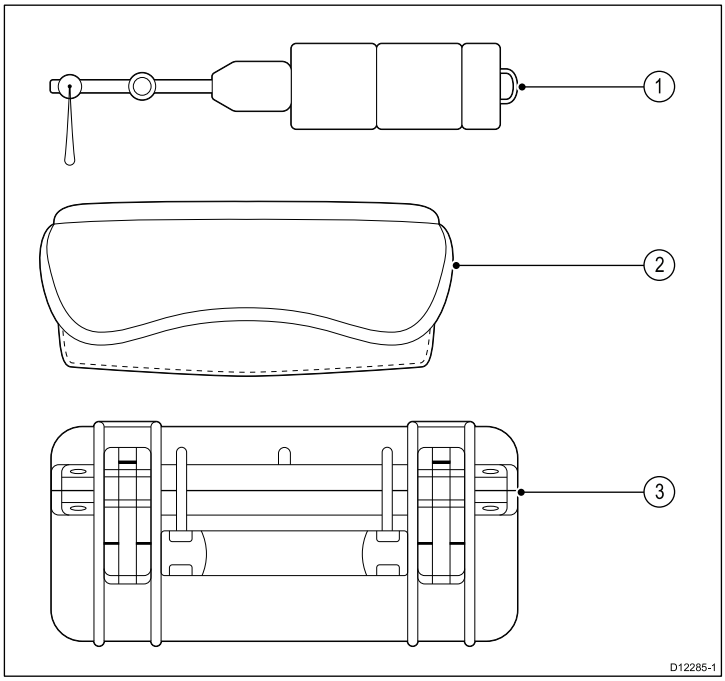

1. Floating lanyard.
2. Soft carrying pouch.
3. Hard-shell storage case.

3.2 Camera features and controls

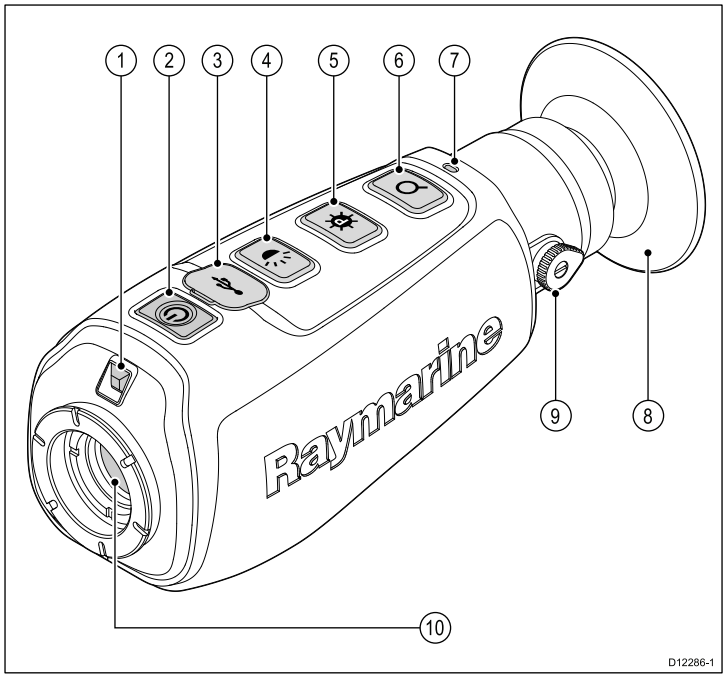

1. Tasklight.
2. Power button.
3. USB charging socket.
4. Display brightness and tasklight on / off.
5. Display mode.
6. Zoom (TH32 model) / Freeze frame (TH24 model).
7. Charging indicator.
8. Eyepiece and display.
9. Diopter adjustment.
10. Objective lens.
11. Lanyard clip.
12. Tripod attachment point.

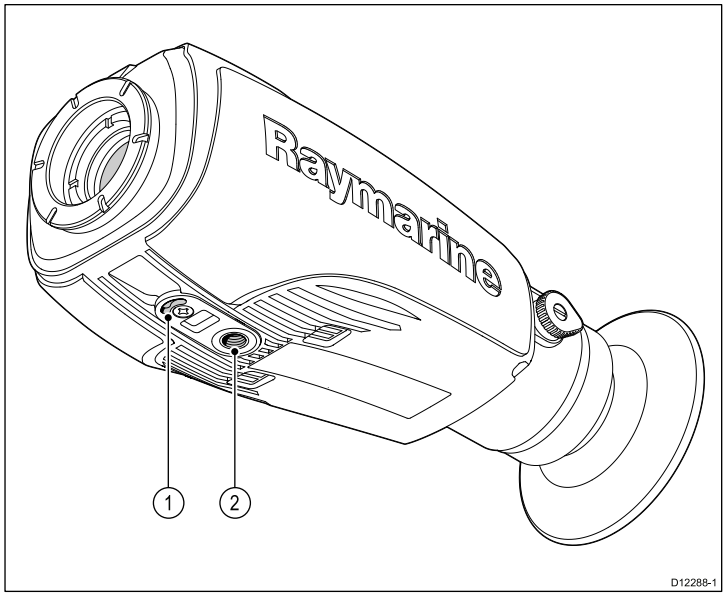

1. Lanyard clip.
2. Tripod attachment point.

3.3 Charging the camera

You must fully charge the camera's internal Li-Ion battery before using the camera for the first time.

To charge the camera:

1. Lift the cover on the USB socket, and plug in the USB cable provided with the camera.
2. Plug the other end of the cable into a USB power source.

   When charging correctly, the charging indicator is lit yellow.

When fully charged, the charging indicator is lit green. The initial charge time is approximately 4 hours.

3.4 Switching on and off

Ensure that the camera's internal battery is charged.

To switch the camera on and off:

1. With the camera switched off, press the **Power button**.

   An audible alert sounds, the display turns on, and the camera buttons are back-lit. The camera is ready to use in approximately 4 seconds.
2. With the camera switched on, press the **Power button**.

   An audible alert sounds, the display turns off, and the camera buttons go dark.

   If you press the **Display Brightness** button, the LED tasklight turns on.

Note: The LED tasklight is disabled while the camera is switched on.

3.5 Power management

Your camera is equipped with a power management system that provides up to 5 hours of continuous operation.

When switched off, the battery will hold a charge for up to 2 months.

If no buttons are pressed for approximately 5 minutes, the camera will switch off automatically. This prevents the battery from draining if you inadvertently leave the camera switched on.

When auto-shutdown begins, **Auto shutdown 30s** is shown in the display. After counting down for 30 seconds, the camera will switch off.

To stop the auto-shutdown process once it has begun, press any button. (The normal function of the button will not occur.)

3.6 Battery status indicator

Your camera is equipped with a sophisticated power system, using a rechargeable internal Li-Ion battery.

While the camera is switched on, a battery status indicator is shown in the corner of the display. This indicator provides an estimate of the remaining battery charge:

Display icon	Battery status
	Full charge
	Half charge
	Charging

3.7 Adjusting the display brightness

You can adjust the display brightness on the camera to the level you find most comfortable to use.

To adjust the display brightness:

1. Press the **Display brightness** button once.

   One of the following icons is displayed for a few seconds, indicating the current brightness level:

Display icon	Brightness level
	Low
	Medium-low
	Medium
	Medium-high
	High

2. To select a different brightness level, press the **Display brightness** button again.

   Subsequent button presses will cycle through all available brightness levels.

Note: If the camera is switched off, holding down the **Display brightness** button turns on the LED tasklight. The tasklight is disabled if the camera is switched on.

3.8 Changing the display mode

Your camera has 3 display modes. You can switch between display modes to help you see more clearly in different environmental conditions.

To adjust the display mode:

1. Press the **Display mode** button once.

   One of the following icons is displayed for a few seconds, indicating the current display mode:

Display icon	Display mode
	White hot — hotter objects appear as white or light grey.
	Black hot — hotter objects appear as black or dark grey.
	Marine red — similar to the **White hot** display mode, but the hottest objects in the scene are colored red to maintain normal night vision.

2. To select a different display mode, press the **Display mode** button again.

   Subsequent button presses will cycle through all 3 display modes.

Note: While White hot is the most commonly used and visually intuitive way of viewing thermal images, Black hot can enhance the contrast of certain objects, or provide better visual perspective in some conditions.

3.9 Zooming the display (TH32 model only)

Your camera (TH32 model only) has a zoom function. Zooming the display enables you to inspect the scene more closely.

To switch the camera to 2x zoom:

1. Press the **Zoom button** once.

   The central part of the image is magnified to twice its normal size, and the zoom icon is displayed:

Zoom icon	

2. To return to no zoom (full resolution), press the **Zoom button** again.

3.10 Freezing the display (TH24 model only)

Your camera (TH24 model only) has a freeze-frame function. Freezing the display enables you to inspect the scene more closely.

To freeze the display:

1. Press the **Freeze frame** button once.

   The display image is frozen.

2. To return to normal video display, press the **Freeze frame** button again.

3.11 Adjusting the eyepiece diopter setting

Your camera has a diopter adjustment system built into the eyepiece. You can use this to adjust the eyepiece focus up to ±2 diopters, making it easier to use the camera if you usually wear glasses.

To adjust the eyepiece diopter setting:

1. While looking through the eyepiece with the camera switched on, slowly rotate the diopter control until the display appears in focus.

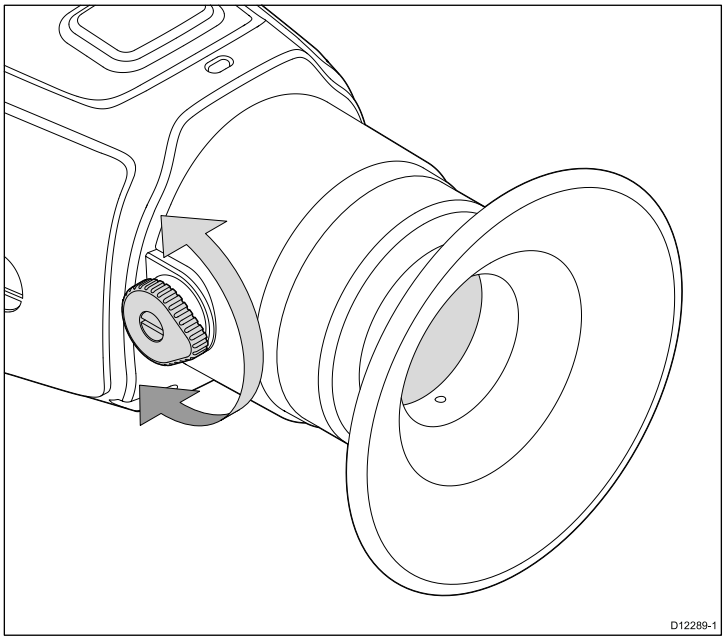

2. Once you have adjusted the diopter setting, leave the diopter control in its new position unless someone else needs to use the camera.

Note: When the pointed side of the diopter control is directed towards the camera eyepiece, it is in its neutral position (zero diopters).

Chapter 4: Troubleshooting and support

Chapter contents

- 4.1 TH-Series troubleshooting on page 22
- 4.2 Raymarine customer support on page 23

4.1 TH-Series troubleshooting

Problems with the thermal camera and their possible causes and solutions are described here.

Problem	Possible causes	Possible solutions
No image visible on display.	The camera is switched off, or has automatically shut down.	If no buttons are pressed for approximately 5 minutes, the camera will shut down automatically. To switch on, press the **Power button**. The camera will be ready to use in approximately 4 seconds.
	The internal battery is discharged.	Charge the camera, as described in this manual. When fully charged, the charging indicator is lit green.
	The lens cover has not been removed.	Remove the lens cover from the objective lens on the front of the camera while in use. Remember to replace the lens cover after use, to protect the objective lens from damage.
Image too dark or too light.	The display brightness is set too low.	Press the **Display brightness** button several times to select an appropriate brightness level.
	The display mode is not appropriate for the current conditions.	A particular environment may benefit from a different display mode setting. For example, a very cold background (such as the sky) could cause the camera to use a wider temperature range than appropriate. Press the **Display mode** button to cycle through the different display modes.
Image artifacts visible on display.	The camera was pointed at an intense light source (such as the sun), for an extended period.	Image artifacts will disappear in time. The camera periodically performs automatic corrections to remove image artifacts.

4.2 Raymarine customer support

Raymarine provides a comprehensive customer support service. You can contact customer support through the Raymarine website, telephone and email. If you are unable to resolve a problem, please use any of these facilities to obtain additional help.

Web support

Please visit the customer support area of our website at:

www.raymarine.com

This contains Frequently Asked Questions, servicing information, e-mail access to the Raymarine Technical Support Department and details of worldwide Raymarine agents.

Telephone and email support

In the USA:

- **Tel:** +1 603 324 7900
- **Toll Free:** +1 800 539 5539
- **Email:** support@raymarine.com

In the UK, Europe, the Middle East, or Far East:

- **Tel:** +44 (0)13 2924 6777
- **Email:** ukproduct.support@raymarine.com

Product information

If you need to request service, please have the following information to hand:

- Product name.
- Product identity.
- Serial number.
- Software application version.

You can obtain this product information using the menus within your product.

Chapter 5: Technical specification

Chapter contents

- 5.1 TH-Series model-specific features on page 26
- 5.2 TH-Series technical data — all models on page 26

5.1 TH-Series model-specific features

Model number	Features
TH24	Video resolution: 240 x 180 pixels (with freeze-frame) Detect man* (1.8 m x 0.5 m) at 350 yd (320 m)
TH32	Video resolution: 320 x 240 pixels (with 2x digital electronic zoom) Detect man* (1.8 m x 0.5 m) at 500 yd (450 m)
*Actual range may vary depending on camera setup, environmental conditions, and user experience.	

5.2 TH-Series technical data — all models

Startup from standby	< 5 seconds
Thermal sensitivity	< 50 mK @ f/1.0
Waveband	7.5 - 13.5 µm
Detector type	VOx Microbolometer
Image processing	FLIR proprietary Digital Detail Enhancement
Focus	Fixed
Video refresh rate	9 Hz
Field of view (FOV)	24° x 18°
Battery type	Internal Li-Ion
Battery Life	Approximately 5 hours (at room temperature)
Operational temperature range	-4°F to 122°F (-20°C to 50°C)
Storage temperature range	-40°F to 140°F (-40°C to 60°C)
Ratings	IP-67; 1 metre drop
Weight	12 oz. (340 g) with battery
Size (Length x Width x Height)	6.70” x 2.31” x 2.44” (172 mm x 58.7 mm x 62 mm)

Chapter 6: Options and accessories

Chapter contents

- 6.1 Accessories and spare parts on page 28

6.1 Accessories and spare parts

Optional accessories and spare parts for TH-Series cameras.

Optional accessories

Item	Part number	Notes
Floating lanyard	A80021	
Soft carry pouch	A80022	
Hard storage case	A80023	

Spare parts

Item	Part number	Notes
USB charging cable	A80028	
Drawstring pouch	A80029	
Lens cap	A80030	
Eye cup	A80031	
Wrist strap	A80032	

Raymarine®

A FLIR COMPANY

www.raymarine.com

CE